SPECIFICATIONS

[General Specifications]

Model	5 tiers	LME-512
	4 tiers	LME-412
	3 tiers	LME-312
	2 tiers	LME-212
	1 tier	LME-112
Rated Voltage		120VAC (50/60Hz)
Operating Voltage Range		Rated Voltage ±10%
Signal Wire Current	Typ.	Per Unit
		Red:52.6mA Amber:52.6mA Green:14.0mA Blue:14.0mA White:14.0mA
		Buzzer: — — —
	Max.	Per Unit
		Red:65.5mA Amber:65.5mA Green:20.5mA Blue:20.5mA White:20.5mA
		Buzzer: — — —
Rated Power Consumption	Typ.	Per Unit
		Red:2.0W Amber:2.0W Green:0.8W Blue:0.8W White:0.8W
		Buzzer: — — —
		Standby power consumption : 1.7W
Operating Ambient Temperature		-30℃ to +60℃
Operating Ambient Humidity		Less than 90% (No condensation)
Mounting Location		Indoors
Mounting Direction		Upright
Protection Rating		IP65 (IEC 60529)
	Environmental Condition	— — —
Vibration Resistance		19.6m/s² (30Hz Horizontal:Front and rear.2hours,right and left.2hours Vertical:Up and down.2hours)
Insulation Resistance		More than 1MΩ at 500VDC between the terminals and the chassis
Withstand Voltage		1000VAC applied for 1min between terminals and chassis without breaking insulation
Flashing Rate		— — —
Sound Pressure Level	Volume Adjustment Range	— — —
		— — —
	Environmental Condition	— — —
Luminous Intensity		Red: 350mcd or more ; Amber: 580mcd or more ; Green: 2500mcd or more Blue: 900mcd or more ; White: 2700mcd or more
Mass (Tolerance ±10%)		1 tier : 0.68kg 2 tiers : 0.73kg 3 tiers : 0.78kg 4 tiers : 0.83kg 5 tiers : 0.88kg
Outer Dimensions		Refer to the Outer Dimension Drawing
Remarks		・This product complies with the RoHS Directive ・The total power consumption is the LED Unit power consumption in addition to the standby power necessary to operate the product.

No. LME-512-W18A-1_2

PATLITE Corporation

Model No. Configuration

LME-□12-□□

- Light style: 1:1 Tier, 2:2 Tiers, 3:3 Tiers, 4:4 Tiers, 5:5 Tiers
- Rated Voltage: 12:120V AC
- LED Unit Color: (R:Red/Y:Amber/G:Green/B:Blue/C:White) ＊Lens color from top to bottom
- Color of Lens: Blank:Color Lens, -Z(Z):Clear Lens

Mounting Hole Template(1/1)

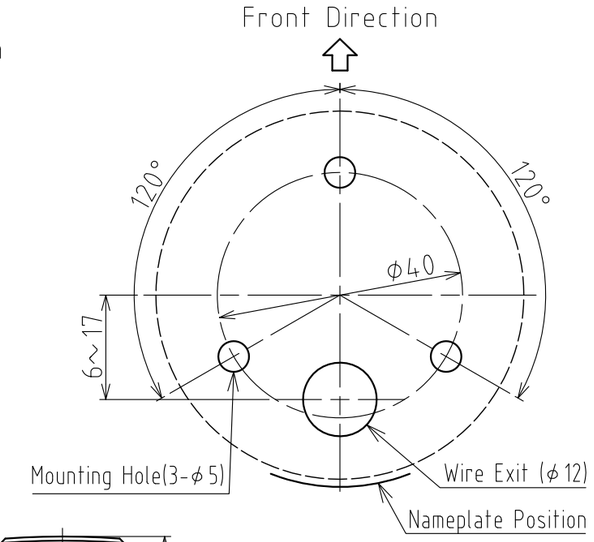

Wiring Example

(Signal Wire:UL1007/AWG22 Power Supply Wire, Earth Wire:UL1015/AWG18)

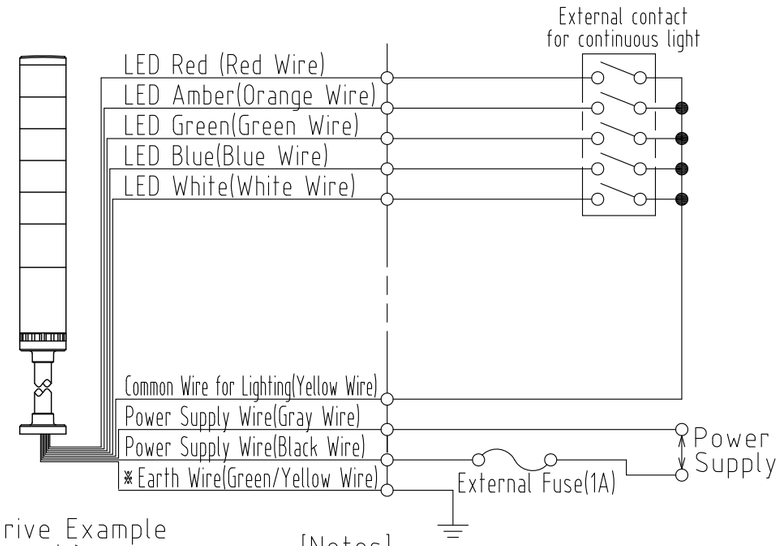

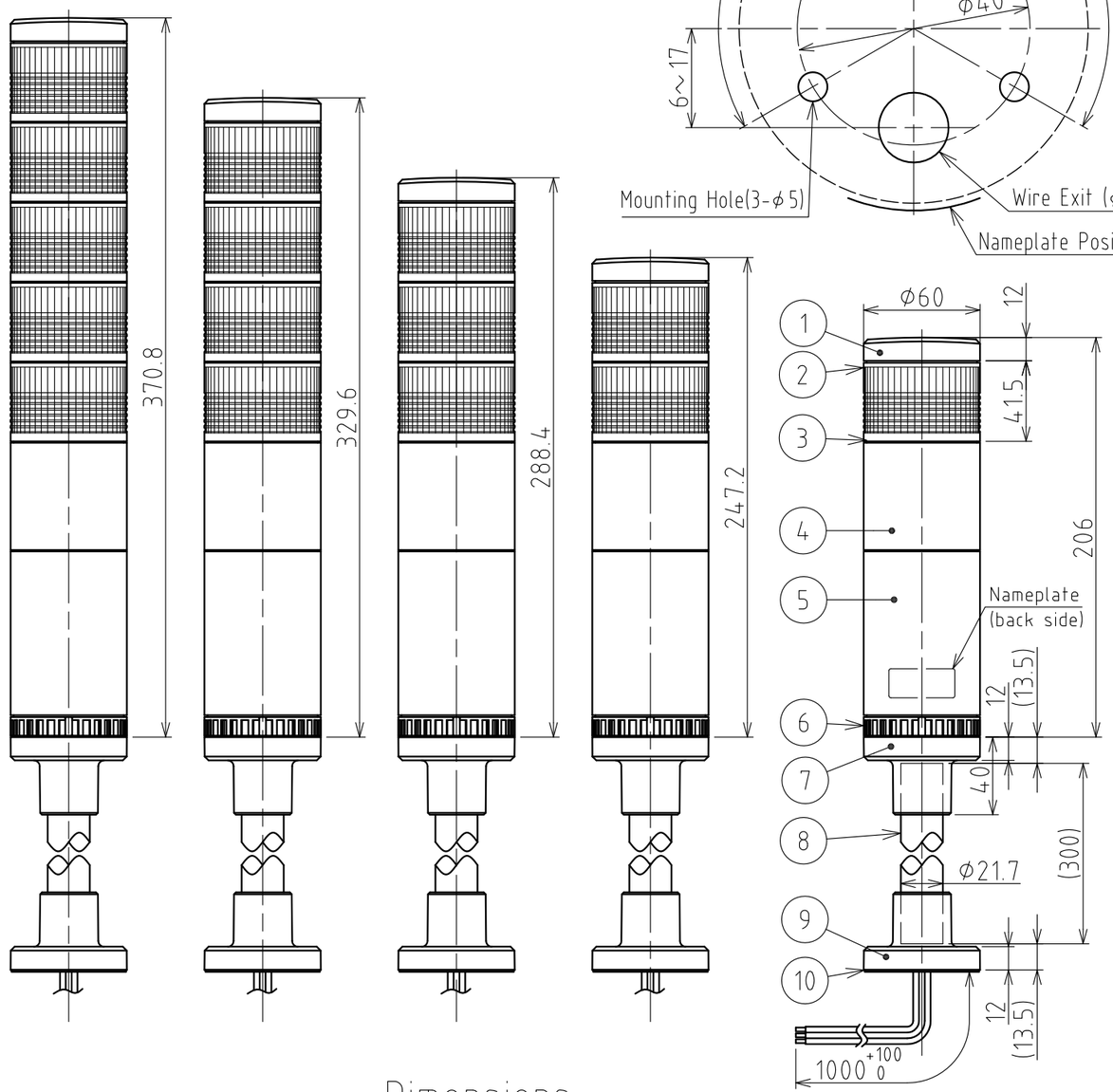

Dimensions

Transistor Drive Example

(NPN Transistor only)

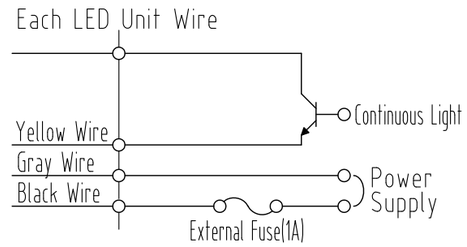

[Notes]

1. Make sure unused wire ends are insulated by tape or other means of insulation.
2. Be sure to use fuses and fuse holders authenticated or authorized by UL Inc.
3. Use the properly rated fuse for the machine in which the product is being installed in. (Example: Class J Type Fuse)

番号 No.	部品名 Part Name	品目コード Part No.	数量 Qty.	材料 & 寸法 & 処理 Material & Size & Finish	記事 Remarks
10	Waterproof-Sheet		1	CR	Black
9	Pole Bracket		1	ABS	Light Gray
8	Pole		1	AL	
7	Pole Bracket		1	ABS	Light Gray
6	Bracket		1	ABS	Light Gray
5	Body A		1	ABS	Light Gray
4	Body B		1	ABS	Light Gray
3	O-Ring		Tiers+3	NBR	Black
2	LED Unit Assembly		Tiers	LED color:Red,Amber,Green,Blue,White Lens: AS; Reflector: ABS	
1	Head Cover		1	ABS	Light Gray

LME-□12
Outer Dimension Drawing

株式会社 パトライト
PATLITE Corporation

LME-512-W18A-2_2

SPECIFICATIONS

[General Specifications]

Model	5 tiers	LME-512W
	4 tiers	LME-412W
	3 tiers	LME-312W
	2 tiers	LME-212W
	1 tier	LME-112W
Rated Voltage		120VAC (50/60Hz)
Operating Voltage Range		Rated Voltage ±10%
Signal Wire Current	Typ.	Per Unit
		Red:52.6mA Amber:52.6mA Green:14.0mA Blue:14.0mA White:14.0mA
		Buzzer: — — —
	Max.	Per Unit
		Red:65.5mA Amber:65.5mA Green:20.5mA Blue:20.5mA White:20.5mA
		Buzzer: — — —
Rated Power Consumption	Typ.	Per Unit
		Red:2.0W Amber:2.0W Green:0.8W Blue:0.8W White:0.8W
		Buzzer: — — —
		Standby power consumption : 1.7W
Operating Ambient Temperature		-30℃ to +60℃
Operating Ambient Humidity		Less than 90% (No condensation)
Mounting Location		Indoors
Mounting Direction		Upright
Protection Rating		IP65 (IEC 60529)
	Environmental Condition	---
Vibration Resistance		19.6m/s² (30Hz Horizontal:Front and rear.2hours,right and left.2hours Vertical:Up and down.2hours)
Insulation Resistance		More than 1MΩ at 500VDC between the terminals and the chassis
Withstand Voltage		1000VAC applied for 1min between terminals and chassis without breaking insulation
Flashing Rate		— — —
Sound Pressure Level	Volume Adjustment Range	— — —
		— — —
	Environmental Condition	— — —
Luminous Intensity		Red: 350mcd or more ; Amber: 580mcd or more ; Green: 2500mcd or more Blue: 900mcd or more ; White: 2700mcd or more
Mass (Tolerance ±10%)		1 tier : 0.52kg 2 tiers : 0.57kg 3 tiers : 0.62kg 4 tiers : 0.67kg 5 tiers : 0.72kg
Outer Dimensions		Refer to the Outer Dimension Drawing
Remarks		・This product complies with the RoHS Directive ・The total power consumption is the LED Unit power consumption in addition to the standby power necessary to operate the product.
No. LME-512W-W18A-1_2		

PATLITE Corporation

Model No. Configuration

LME-□12W-□□□

- ■Light Style
  - 1:1 Tier
  - 2:2 Tiers
  - 3:3 Tiers
  - 4:4 Tiers
  - 5:5 Tiers
- ■Rated Voltage
  - 12:120V AC
- ■Installation Method
  - W:Direct mount
- ■LED Unit Color
  - (R:Red/Y:Amber/G:Green/B:Blue/C:White)
  - ＊Lens color from top to bottom
- ■Color of Lens
  - Blank:Color Lens
  - -Z(Z):Clear Lens

Mounting Hole Template(1/1)

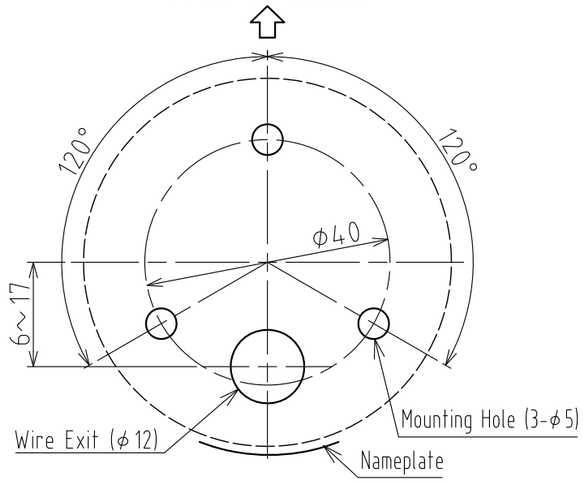

Wiring Example

(Signal Wires: UL1007/AWG22, Power Supply Wires, Earth Wire: UL1007/AWG18)

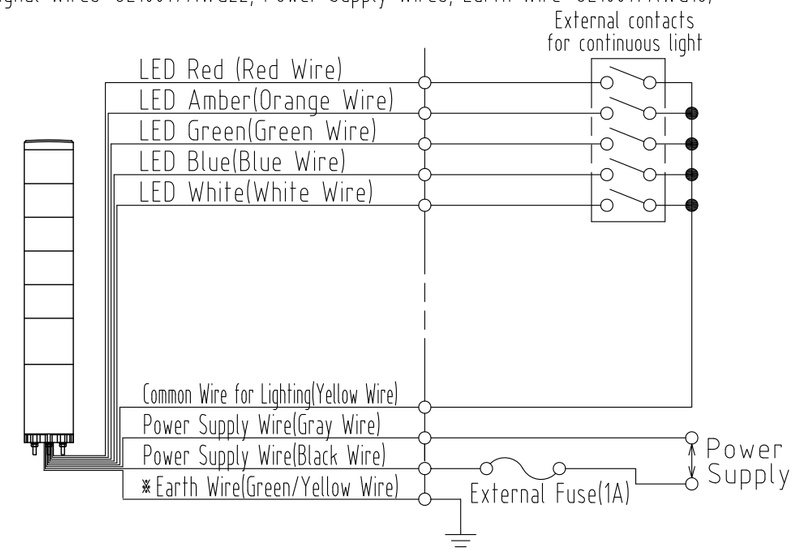

Transistor Drive Example

(NPN Transistor Only)

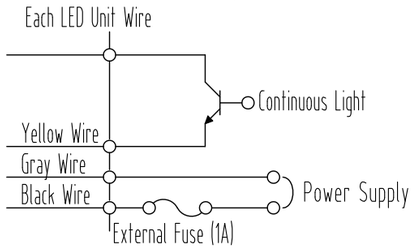

[Notes]

1. Make sure unused wire ends are insulated by tape or other means of insulation.
2. Be sure to use fuses and fuse holders authenticated or authorized by UL Inc.
3. Use the properly rated fuse for the machine in which the product is being installed in. (Example: Class J Type Fuse)

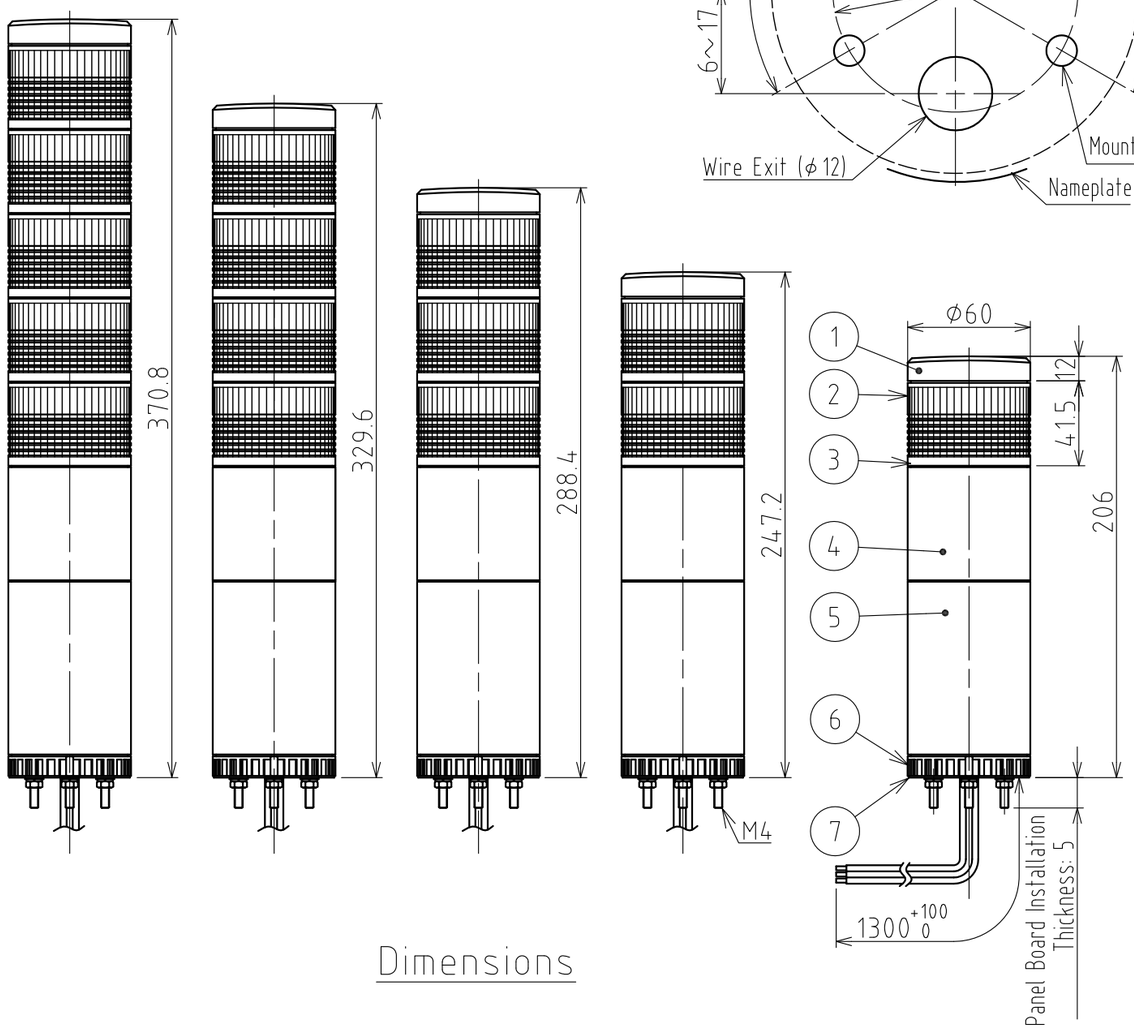

Dimensions

番号 No.	部品名 Part Name	品目コード Part No.	数量 Qty.	材料 & 寸法 & 処理 Material & Size & Finish	記事 Remarks
7	Waterproof-Sheet		1	CR	Black
6	Bracket		1	ABS	Light Gray
5	Body A		1	ABS	Light Gray
4	Body B		1	ABS	Light Gray
3	O-Ring		Tires+3	NBR	Black
2	LED Unit Assembly		Tires	LED color:Red,Amber,Green,Blue,White Lens:AS; Reflector:ABS	
1	Head Cover		1	ABS	Light Gray

LME-□12W
Outer Dimension Drawing

株式会社 パトライト
PATLITE Corporation

LME-512W-W18A-2_2

SPECIFICATIONS

[General Specifications]

Model	5 tiers	LME-512FB
	4 tiers	LME-412FB
	3 tiers	LME-312FB
	2 tiers	LME-212FB
	1 tier	LME-112FB
Rated Voltage		120VAC (50/60Hz)
Operating Voltage Range		Rated Voltage ±10%
Signal Wire Current	Typ.	Per Unit
		Red:52.6mA Amber:52.6mA Green:14.0mA Blue:14.0mA White:14.0mA
		Buzzer:40mA
	Max.	Per Unit
		Red:65.5mA Amber:65.5mA Green:20.5mA Blue:20.5mA White:20.5mA
		Buzzer:50mA (Inrush Current:250mA)
Rated Power Consumption	Typ.	Per Unit
		Red:2.0W Amber:2.0W Green:0.8W Blue:0.8W White:0.8W
		Buzzer:1.4W
		Standby power consumption : 1.7W
Operating Ambient Temperature		-30℃ to +60℃
Operating Ambient Humidity		Less than 90% (No condensation)
Mounting Location		Indoors
Mounting Direction		Upright
Protection Rating		IP54 (IEC 60529)
	Environmental Condition	---
Vibration Resistance		19.6m/s² (30Hz Horizontal:Front and rear.2hours,right and left.2hours Vertical:Up and down.2hours)
Insulation Resistance		More than 1MΩ at 500VDC between the terminals and the chassis
Withstand Voltage		1000VAC applied for 1min between terminals and chassis without breaking insulation
Flashing Rate		60±12 Flashes Per Minute
Sound Pressure Level	Volume Adjustment Range	Buzzer 1: Continuous Beep Max.:84±4dB Min.:68±4dB
		Buzzer 2: Intermittent Beep Max.:86±4dB Min.:68±4dB
	Environmental Condition	Front direction from the center/at 1m
Luminous Intensity		Red: 350mcd or more ; Amber: 580mcd or more ; Green: 2500mcd or more Blue: 900mcd or more ; White: 2700mcd or more
Mass (Tolerance ±10%)		1 tier : 0.71kg 2 tiers : 0.76kg 3 tiers : 0.81kg 4 tiers : 0.86kg 5 tiers : 0.91kg
Outer Dimensions		Refer to the Outer Dimension Drawing
Remarks		・This product complies with the RoHS Directive ・The total power consumption is the LED Unit (and Buzzer) power consumption in addition to the standby power necessary to operate the product.

No. LME-512FB-W18A-1_2

PATLITE Corporation

Model No. Configuration

LME-□12FB-□□□ □

- Light style: 1:1 Tier, 2:2 Tiers, 3:3 Tiers, 4:4 Tiers, 5:5 Tiers
- Rated Voltage: 12:120V AC
- Type: FB: Flashing/Alarm
- LED Unit Color (R:Red/Y:Amber/G:Green/B:Blue/C:White) ＊Lens color from top to bottom
- Color of Lens: Blank:Color Lens, -Z(Z):Clear Lens

Mounting Hole Template(1/1)

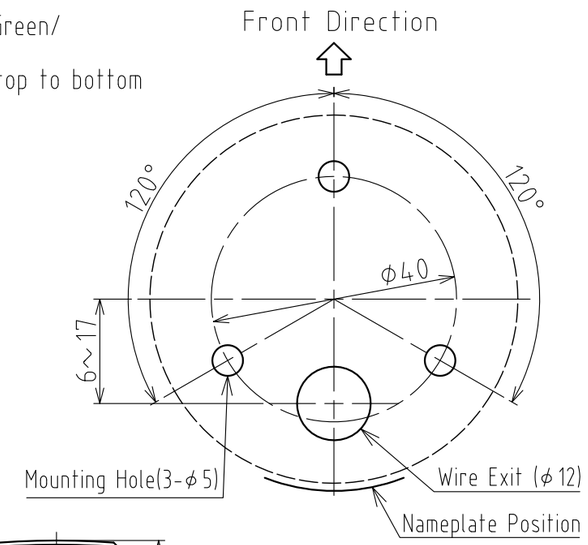

Wiring Example

(Signal Wire:UL1007/AWG22 Power Supply Wire,Earth Wire:UL1015/AWG18)

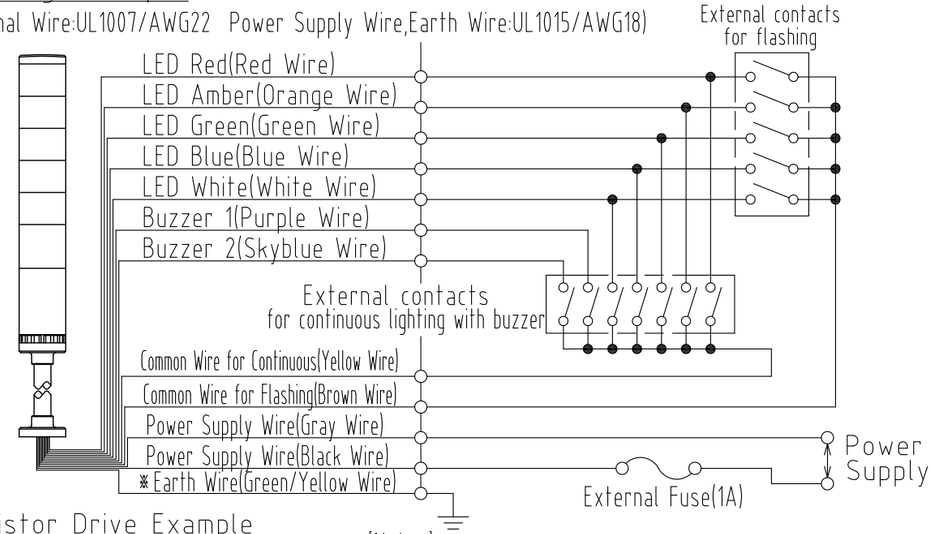

Transistor Drive Example

(NPN Transistor Only)

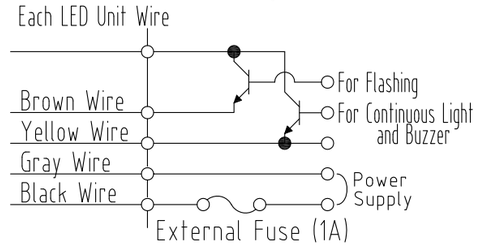

[Notes]

1. Make sure unused wire ends are insulated by tape or other means of insulation.
2. When Buzzer 1 and Buzzer 2 are simultaneously connected to common, Buzzer 1 is priority.
3. When connecting to a PC Unit, the grounds for continuous and flashing/alarm have to be separate lines.
4. Do not wire an external contact to control the continuous and flashing/alarm simultaneously. Failure to comply may cause all LED lighting units to turn on at the same time. To avoid this, separate external contacts for continuous and flashing/alarm are required.

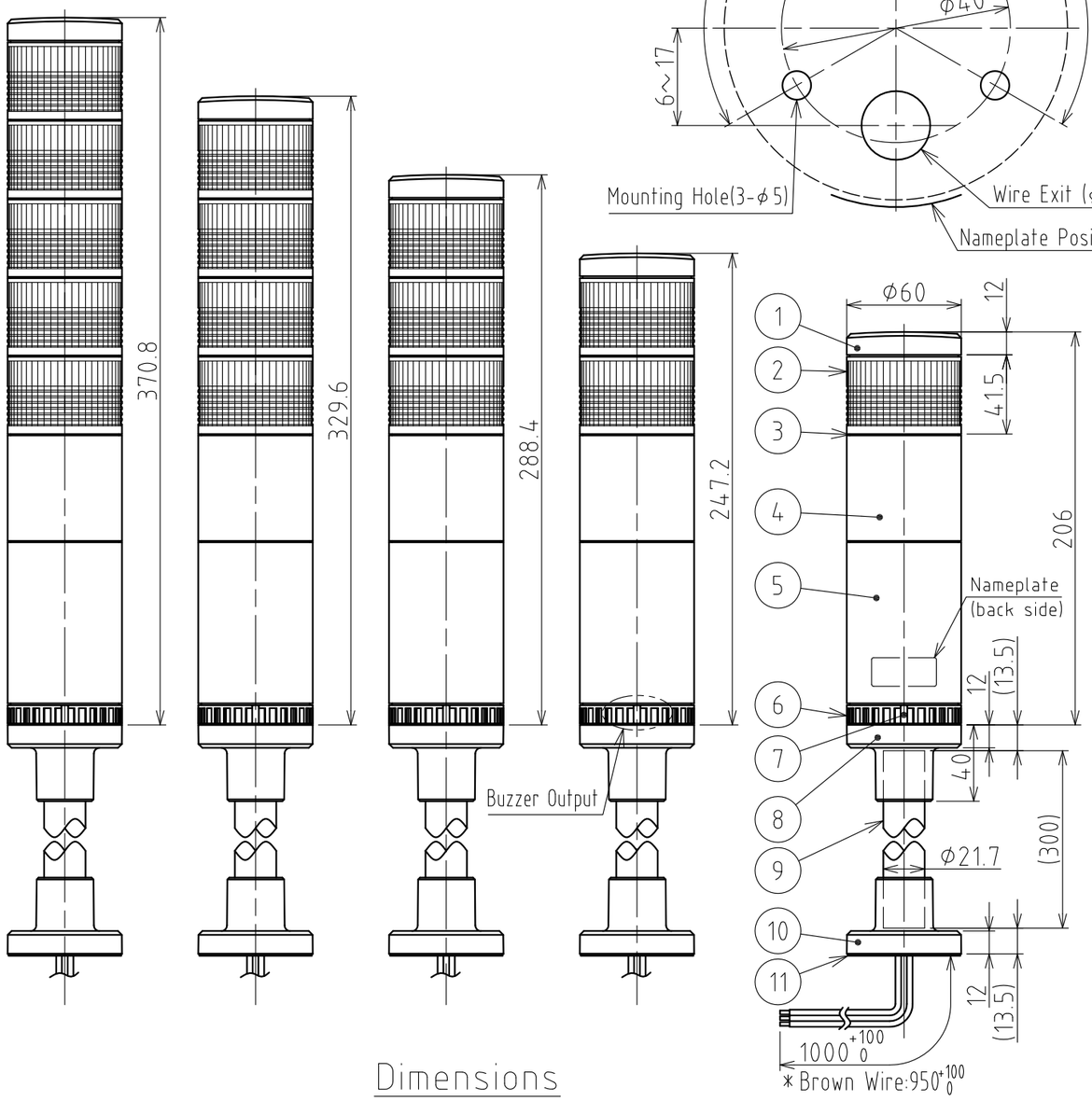

Dimensions

番号 No.	部品名 Part Name	品目コード Part No.	数量 Qty.	材料 & 寸法 & 処理 Material & Size & Finish	記事 Remarks
11	Waterproof-Sheet		1	CR	Black
10	Pole Bracket		1	ABS	Light Gray
9	Pole		1	AL	
8	Pole Bracket		1	ABS	Light Gray
7	Volume		1	ABS	Light Gray
6	Bracket		1	ABS	Light Gray
5	Body A		1	ABS	Light Gray
4	Body B		1	ABS	Light Gray
3	O-Ring		Tiers+3	NBR	Black
2	LED Unit Assembly		Tiers	LED color:Red,Amber,Green,Blue,White Lens: AS; Reflector: ABS	
1	Head Cover		1	ABS	Light Gray

LME-□12FB
Outer Dimension Drawing

株式会社 パトライト
PATLITE Corporation

LME-512FB-W18A-2_2

SPECIFICATIONS

[General Specifications]

Model	5 tiers	LME-512FBW
	4 tiers	LME-412FBW
	3 tiers	LME-312FBW
	2 tiers	LME-212FBW
	1 tier	LME-112FBW
Rated Voltage		120VAC (50/60Hz)
Operating Voltage Range		Rated Voltage ±10%
Signal Wire Current	Typ.	Per Unit
		Red:52.6mA Amber:52.6mA Green:14.0mA Blue:14.0mA White:14.0mA
		Buzzer:40mA
	Max.	Per Unit
		Red:65.5mA Amber:65.5mA Green:20.5mA Blue:20.5mA White:20.5mA
		Buzzer:50mA (Inrush Current:250mA)
Rated Power Consumption	Typ.	Per Unit
		Red:2.0W Amber:2.0W Green:0.8W Blue:0.8W White:0.8W
		Buzzer:1.4W
		Standby power consumption : 1.7W
Operating Ambient Temperature		-30℃ to +60℃
Operating Ambient Humidity		Less than 90% (No condensation)
Mounting Location		Indoors
Mounting Direction		Upright
Protection Rating		IP54 (IEC 60529)
	Environmental Condition	---
Vibration Resistance		19.6m/s² (30Hz Horizontal:Front and rear.2hours,right and left.2hours Vertical:Up and down.2hours)
Insulation Resistance		More than 1MΩ at 500VDC between the terminals and the chassis
Withstand Voltage		1000VAC applied for 1min between terminals and chassis without breaking insulation
Flashing Rate		60±12 Flashes Per Minute
Sound Pressure Level	Volume Adjustment Range	Buzzer 1: Continuous Beep Max.:88±4dB Min.:70±4dB
		Buzzer 2: Intermittent Beep Max.:90±4dB Min.:70±4dB
	Environmental Condition	Front direction from the center/at 1m
Luminous Intensity		Red: 350mcd or more ; Amber: 580mcd or more ; Green: 2500mcd or more Blue: 900mcd or more ; White: 2700mcd or more
Mass (Tolerance ±10%)		1 tier : 0.55kg 2 tiers : 0.60kg 3 tiers : 0.65kg 4 tiers : 0.70kg 5 tiers : 0.75kg
Outer Dimensions		Refer to the Outer Dimension Drawing
Remarks		・This product complies with the RoHS Directive ・The total power consumption is the LED Unit (and Buzzer) power consumption in addition to the standby power necessary to operate the product.

No. LME-512FBW-W18A-1_2

PATLITE Corporation

Model No. Configuration

LME-□12FBW-□□□□□

- Light style: 1:1 Tier, 2:2 Tiers, 3:3 Tiers, 4:4 Tiers, 5:5 Tiers
- Rated Voltage: 12:120V AC
- Light Method: FB: Flashing/Alarm
- Installation Method: W:Direct Mount
- LED Unit Color: (R:Red/A:Amber/G:Green/B:Blue/C:White) ＊Lens color from top to bottom

Mounting Hole Template(1/1)

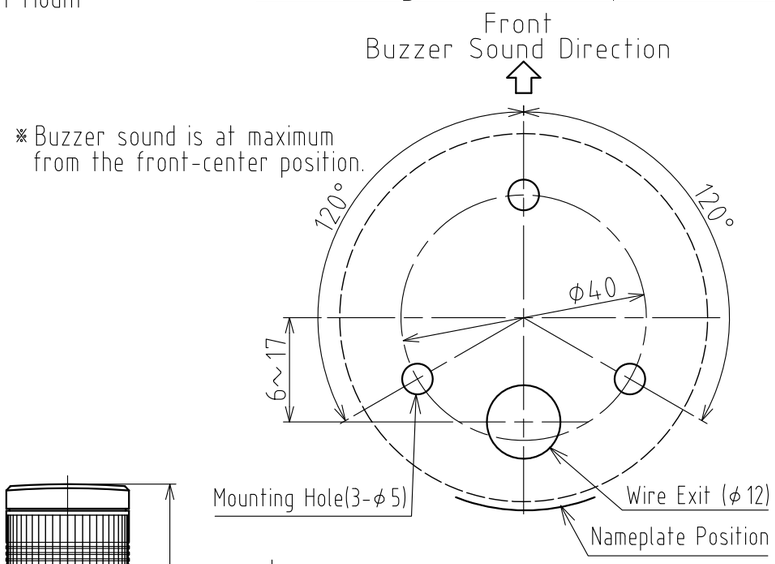

Wiring Example

(Signal Wire:UL1007/AWG22 Power Supply Wire, Earth Wire:UL1007/AWG18)

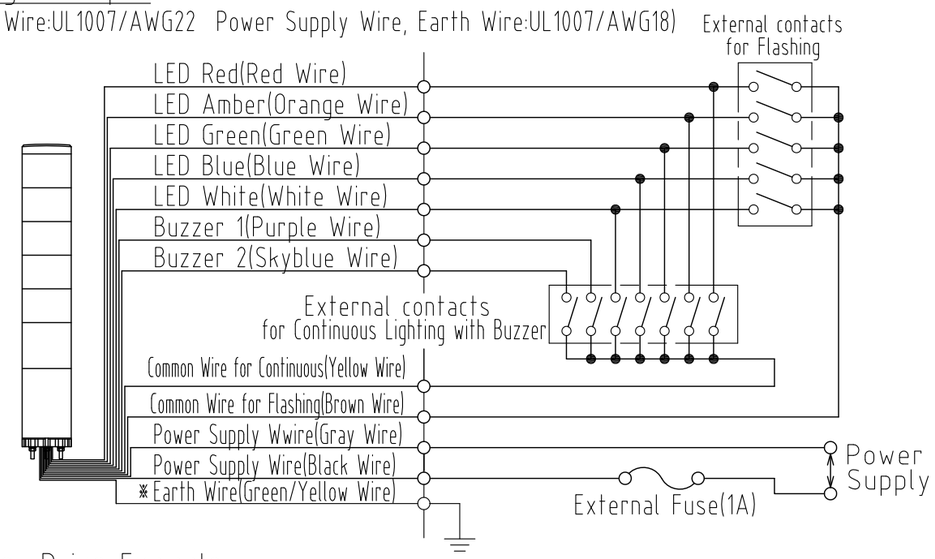

Transistor Drive Example

(NPN Transistor Only)

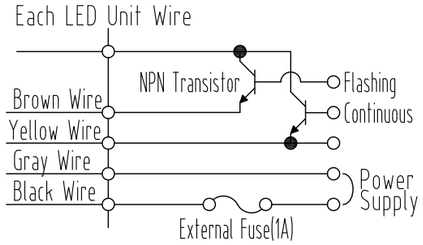

[Notes]

1. Make sure unused wire ends are insulated by tape or other means of insulation.
2. When Buzzer 1 and Buzzer 2 are simultaneously connected to common, Buzzer 1 is priority.
3. When connecting to a PC Unit, the grounds for continuous and flashing/alarm have to be separate lines.
4. Do not wire an external contact to control the continuous and flashing/alarm simultaneously. Failure to comply may cause all LED lighting units to turn on at the same time. To avoid this, separate external contacts for continuous and flashing/alarm are required.

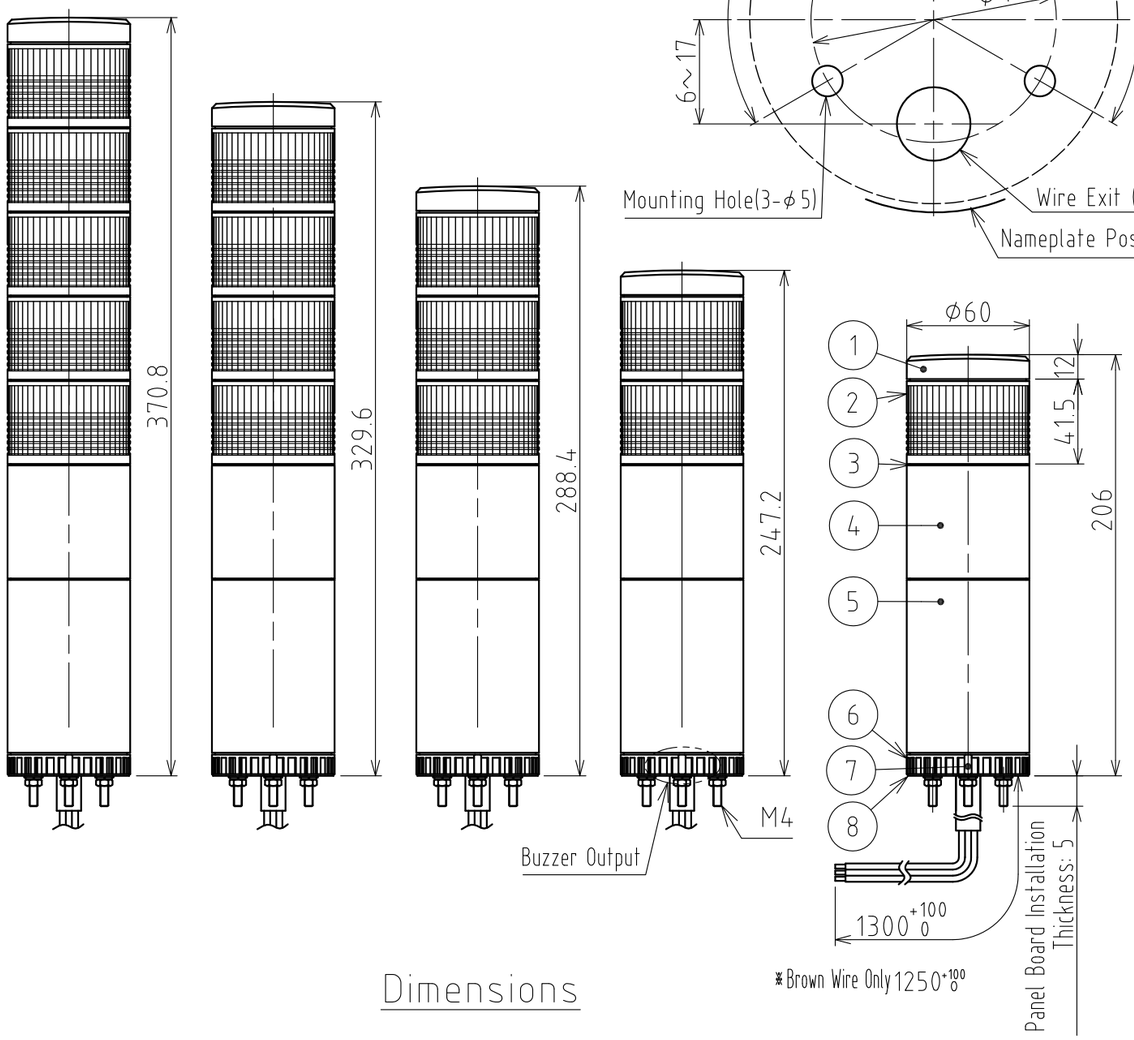

Dimensions

番号 No.	部品名 Part Name	品目コード Part No.	数量 Qty.	材料 & 寸法 & 処理 Material & Size & Finish	記事 Remarks
8	Waterproof-Sheet	-	1	CR	Black
7	Volume	-	1	ABS	Light Gray
6	Bracket	-	1	ABS	Light Gray
5	Body A	-	1	ABS	Light Gray
4	Body B	-	1	ABS	Light Gray
3	O-Ring	-	Tiers+3	NBR	Black
2	LED Unit Assembly	-	Tiers	LED color:Red,Amber,Green,Blue,White Lens:AS; Reflector:ABS	
1	Head Cover	-	1	ABS	Light Gray

LME-□12FBW
Outer Dimension Drawing

株式会社 パトライト
PATLITE Corporation

LME-512FBW-W18A-2_2

SPECIFICATIONS

[General Specifications]

Model	5 tiers	LME-512L
	4 tiers	LME-412L
	3 tiers	LME-312L
	2 tiers	LME-212L
	1 tier	LME-112L
Rated Voltage		120VAC (50/60Hz)
Operating Voltage Range		Rated Voltage ±10%
Signal Wire Current	Typ.	Per Unit
		Red:52.6mA Amber:52.6mA Green:14.0mA Blue:14.0mA White:14.0mA
		Buzzer: — — —
	Max.	Per Unit
		Red:65.5mA Amber:65.5mA Green:20.5mA Blue:20.5mA White:20.5mA
		Buzzer: — — —
Rated Power Consumption	Typ.	Per Unit
		Red:2.0W Amber:2.0W Green:0.8W Blue:0.8W White:0.8W
		Buzzer: — — —
		Standby power consumption : 1.7W
Operating Ambient Temperature		-30℃ to +60℃
Operating Ambient Humidity		Less than 90% (No condensation)
Mounting Location		Indoors
Mounting Direction		Upright
Protection Rating		IP54 (IEC 60529)
	Environmental Condition	---
Vibration Resistance		19.6m/s² (30Hz Horizontal:Front and rear.2hours,right and left.2hours Vertical:Up and down.2hours)
Insulation Resistance		More than 1MΩ at 500VDC between the terminals and the chassis
Withstand Voltage		1000VAC applied for 1min between terminals and chassis without breaking insulation
Flashing Rate		— — —
Sound Pressure Level	Volume Adjustment Range	— — —
		— — —
	Environmental Condition	— — — — — —
Luminous Intensity		Red: 350mcd or more ; Amber: 580mcd or more ; Green: 2500mcd or more Blue: 900mcd or more ; White: 2700mcd or more
Mass (Tolerance ±10%)		1 tier : 0.98kg 2 tiers : 1.03kg 3 tiers : 1.08kg 4 tiers : 1.13kg 5 tiers : 1.18kg
Outer Dimensions		Refer to the Outer Dimension Drawing
Remarks		・This product complies with the RoHS Directive ・The total power consumption is the LED Unit power consumption in addition to the standby power necessary to operate the product.

No. LME-512L-W18B-1_2

PATLITE Corporation

Model No. Configration

LME-□12L-□□□-□

- Light style
  1:1 Tier
  2:2 Tiers
  3:3 Tiers
  4:4 Tiers
  5:5 Tiers
- Rated Voltage
  12:120V AC
- Installation Method
  L:Pole Mount with L-Brachet
- LED Unit Color
  (R:Red/Y:Amber/G:Green/B:Blue/C:White)
  *Lens color from top to bottom
- Color of Lens
  Blank: Color Lens
  -Z(Z): Clear Lens

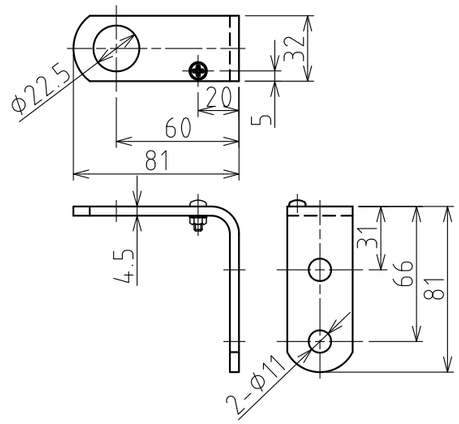

L-Bracket Dimensions
(Material:Steel)

Wiring Example

(Signal Wire:UL1007/AWG22 Power Supply Wire, Earth Wire:UL1015/AWG18)

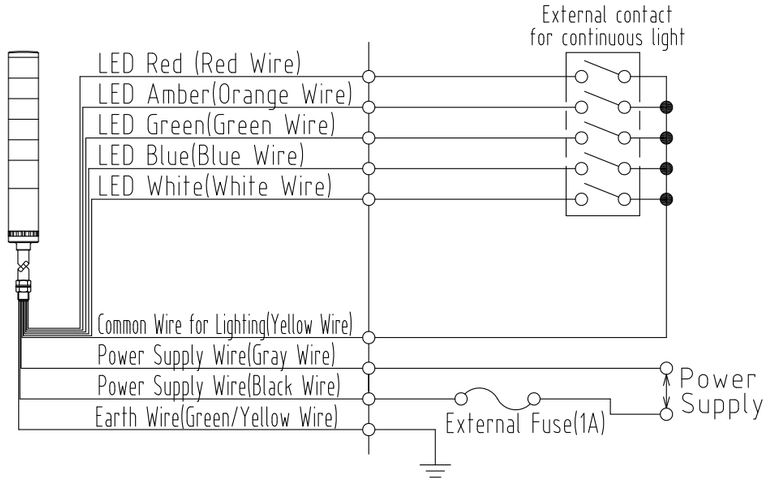

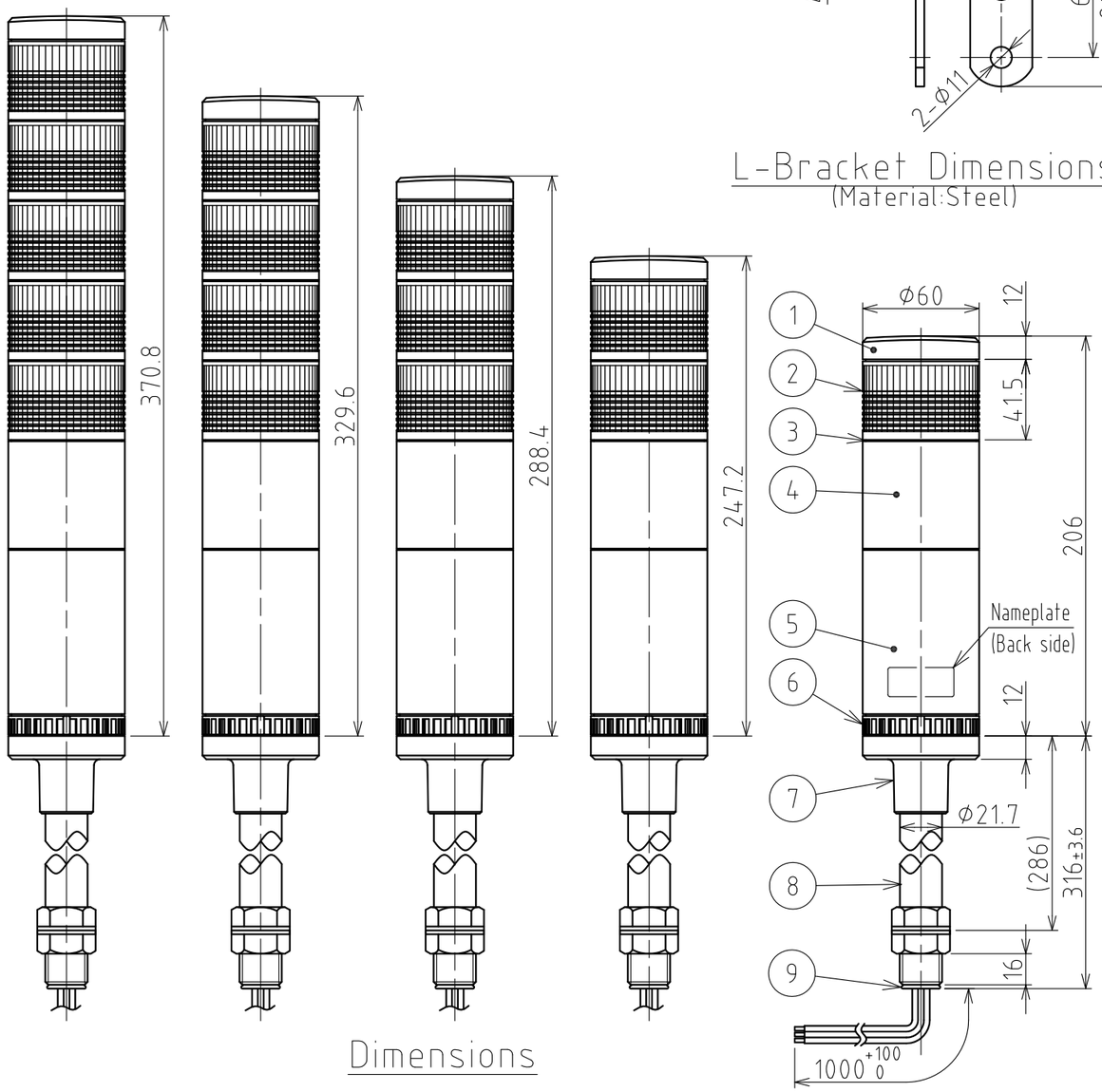

Dimensions

Transistor Drive Example
(NPN Transistor Only)

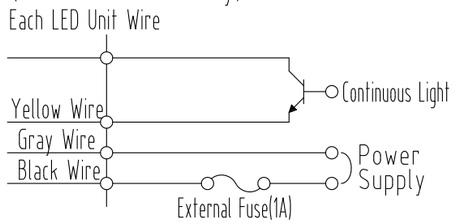

[Notes]

1. Make sure unused wire ends are insulated by tape or other means of insulation.
2. Be sure to use fuses and fuse holders authenticated or authorized by UL Inc.
3. Use the properly rated fuse for the machine in which the product is being installed in. (Example: Class J Type Fuse)

番号 No.	部品名 Part Name	品目コード Part No.	数量 Qty.	材料 & 寸法 & 処理 Material & Size & Finish	記事 Remarks
9	Rubber Bushing		1	EPT	Black
8	Pole		1	Steel Pipe (STKM11A/MFNi-Ni-Cr)	
7	Pole Bracket		1	ABS	Light Gray
6	Bracket		1	ABS	Light Gray
5	Body A		1	ABS	Light Gray
4	Body B		1	ABS	Light Gray
3	O-Ring		Tiers+3	NBR	Black
2	LED Unit Assembly		Tiers	LED color:Red,Yellow,Green/Lens:AS; Refrector:ABS	
1	Head Cover		1	ABS	Light Gray

LME-□12L
Outer Dimension Drawing

株式会社 パトライト
PATLITE Corporation

LME-512L-W18B-2_2

SPECIFICATIONS

[General Specifications]

Model	5 tiers	LME-512FBL
	4 tiers	LME-412FBL
	3 tiers	LME-312FBL
	2 tiers	LME-212FBL
	1 tier	LME-112FBL
Rated Voltage		120VAC (50/60Hz)
Operating Voltage Range		Rated Voltage ±10%
Signal Wire Current	Typ.	Per Unit
		Red:52.6mA Amber:52.6mA Green:14.0mA Blue:14.0mA White:14.0mA
		Buzzer:40mA
	Max.	Per Unit
		Red:65.5mA Amber:65.5mA Green:20.5mA Blue:20.5mA White:20.5mA
		Buzzer:50mA (Inrush Current:250mA)
Rated Power Consumption	Typ.	Per Unit
		Red:2.0W Amber:2.0W Green:0.8W Blue:0.8W White:0.8W
		Buzzer:1.4W
		Standby power consumption : 1.7W
Operating Ambient Temperature		-30℃ to +60℃
Operating Ambient Humidity		Less than 90% (No condensation)
Mounting Location		Indoors
Mounting Direction		Upright
Protection Rating		IP54 (IEC 60529)
	Environmental Condition	---
Vibration Resistance		19.6m/s² (30Hz Horizontal:Front and rear.2hours,right and left.2hours Vertical:Up and down.2hours)
Insulation Resistance		More than 1MΩ at 500VDC between the terminals and the chassis
Withstand Voltage		1000VAC applied for 1min between terminals and chassis without breaking insulation
Flashing Rate		60±12 Flashes Per Minute
Sound Pressure Level	Volume Adjustment Range	Buzzer 1: Continuous Beep Max.:84±4dB Min.:68±4dB
		Buzzer 2: Intermittent Beep Max.:86±4dB Min.:68±4dB
	Environmental Condition	Front direction from the center/at 1m
Luminous Intensity		Red: 350mcd or more ; Amber: 580mcd or more ; Green: 2500mcd or more Blue: 900mcd or more ; White: 2700mcd or more
Mass (Tolerance ±10%)		1 tier : 1.01kg 2 tiers : 1.06kg 3 tiers : 1.11kg 4 tiers : 1.16kg 5 tiers : 1.21kg
Outer Dimensions		Refer to the Outer Dimension Drawing
Remarks		・This product complies with the RoHS Directive ・The total power consumption is the LED Unit (and Buzzer) power consumption in addition to the standby power necessary to operate the product.

No. LME-512FBL-W18A-1_2

PATLITE Corporation

Model No. Configration

LME-□12FBL-□□

- ■ Light Style: 1:1 Tier, 2:2 Tiers, 3:3 Tiers, 4:4 Tiers, 5:5 Tiers
- ■ Rated Voltage: 12:120V AC
- ■ Light Method: FB: Flashing/Alarm
- ■ Installation Method: L:Pole Mount with L-Brachet
- ■ LED Unit Color: (R:Red/Y:Amber/G:Green/B:Blue/C:White) ＊Lens color from top to bottom
- ■ Color of Lens: Blank:Color Lens, -Z(Z):Clear Lens

L-Brachet Dimensions

(Materal:Steel)

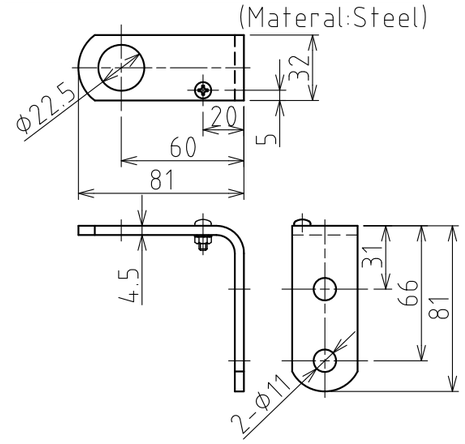

Wiring Example

(Signal Wire:UL1007/AWG22 Power Supply Wire, Earth Wire:UL1015/AWG18)

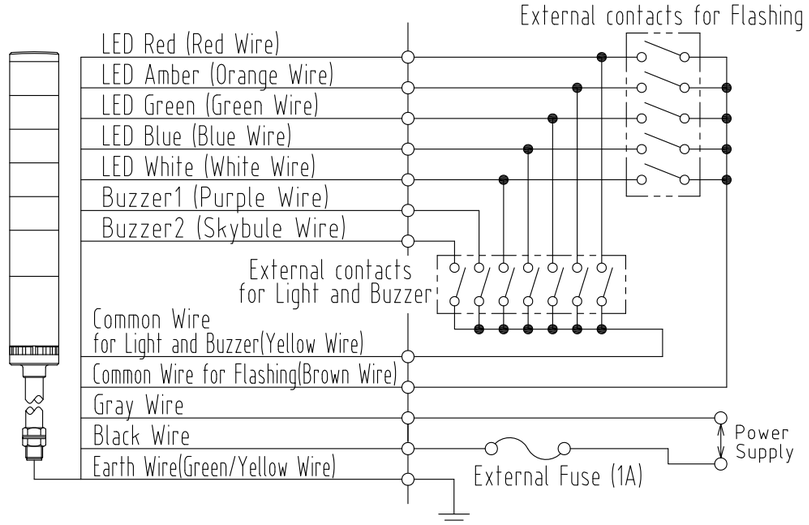

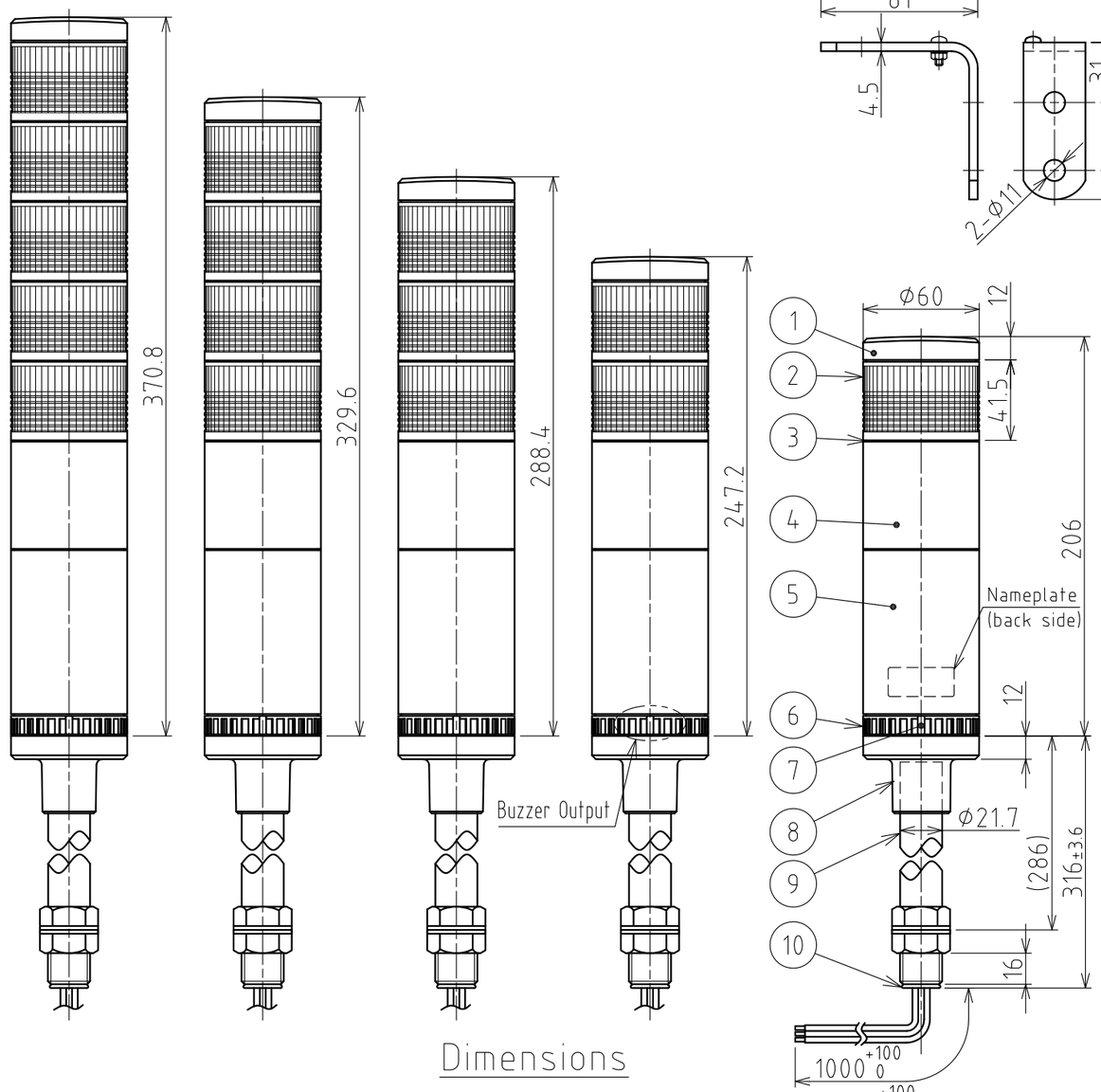

Dimensions

Transistor Drive Example

(NPN Transistor Only)

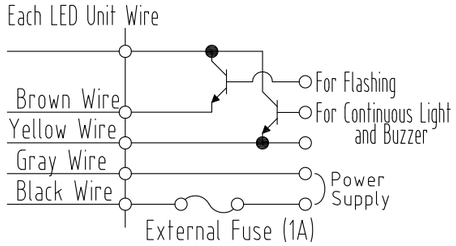

[Notes]

1. Make sure unused wire ends are insulated by tape or other means of insulation.
2. When Buzzer 1 and Buzzer 2 are simultaneously connected to common, Buzzer 1 is priority.
3. When connecting to a PC Unit, the grounds for continuous and flashing/alarm have to be separate lines.
4. Do not wire an external contact to control the continuous and flashing/alarm simultaneously. Failure to comply may cause all LED lighting units to turn on at the same time. To avoid this, separate external contacts for continuous and flashing/alarm are required.

番号 No.	部品名 Part Name	品目コード Part No.	数量 Qty.	材料 & 寸法 & 処理 Material & Size & Finish	記事 Remarks
10	Rubber Bushing	–	1	EPT	Black
9	Pole	–	1	Sttel Pipe(STKM11A) φ21.7 MFNi-Cr	
8	Pole Bracket	–	1	ABS	Light Gray
7	Volume	–	1	ABS	Light Gray
6	Bracket	–	1	ABS	Light Gray
5	Body B	–	1	ABS	Light Gray
4	Body A	–	1	ABS	Light Gray
3	O-Ring	–	Tiers+3	NBR	Black
2	LED Unit Assembly	–	Tiers	Lens:AS; Reflector:ABS	
1	Haed Cover	–	1	ABS	Light Gray

LME-□12FBL
Outer Dimension Drawing

株式会社 パトライト
PATLITE Corporation

LME-512FBL-W18A-2_2