SPECIFICATIONS

Model: RFT

PATLITE Corporation

Specifications

Model	RFT-24□-□	RFT-100□-□	RFT-220□-□
Rated Voltage	24V DC	100V AC 50/60Hz	220V AC 50/60Hz
Operating Voltage Range	24V DC ±10%	100V AC ±10%	220V AC ±10%
Rated Power Consumption	Max. 12W	Max. 13W	Max. 13W
Sound Pressure Level	Max.: 90dB or more Measured sound: 05. "Rapid Hi-Lo" ＊Sound pressure level may be lower depending on the sound and usage environment. 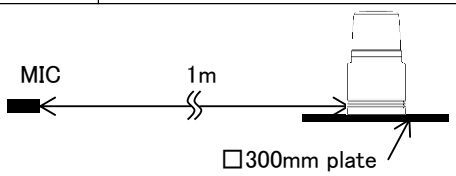 Measurement reference fig.		
Volume Control	Adjustable range: Min～Max Sound reduction input: −10dB ± 2dB (Binary input mode only)		
Channel Input Method	Level hold input (Sound is played back while COM and CH terminals are shorted)		
Channel Input Mode	Bit input mode (Switch No. 4: OFF) CH1～8: CH input ＊Factory default setting		
	Binary input mode (Switch No. 4: ON) CH1～6: CH input CH7 or CH8: Sound reduction input		
Number of Playback Sounds	Bit input mode: 8 sounds Binary input mode: 32 sounds		
Warm-up Time	Signal line start: 300msec or less / Power supply line start: 500msec or less		
Channel Input Priority	CH8 > CH7 > CH6 > CH5 > CH4 > CH3 > CH2 > CH1 (Bit input mode only)		
Test Play	05. "Rapid Hi-Lo" is played by holding the Test switch down		

Revolving Light					
	Light source	LED ＊Light color cannot be changed by exchanging the dome because the light source is colored LED			
	Color	Red	Yellow	Green	Blue
	Brightness	3000 cd or more	3000 cd or more	2500 cd or more	2000 cd or more
	Flashing Rate	115 ± 15 Flashes Per Minute			

Operating Ambient Temperature	−10℃～50℃
Operating Ambient Humidity	Less than 85%RH (No condensation)
Mounting Location	Indoors / Outdoors

Mounting Direction

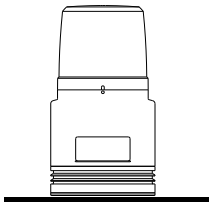

Upright
Indoor: ○ / Outdoor: ○

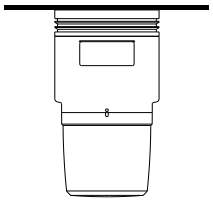

Inverted
Indoor: ○ / Outdoor: ×

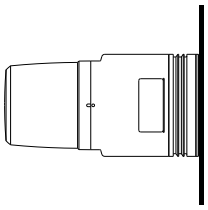

Sideways
Indoor: ○ / Outdoor: ×

Protection Rating	IP54 (Upright direction only)	
Insulation Resistance	More than 1MΩ at 500VDC between the terminals and the chassis	
Withstand Voltage	Applied for 1min between terminals and chassis without breaking insulation	
	500V AC	1000V AC / 1500V AC
Vibration Resistance	Upright direction mounting: 45m/s^2	Upright direction mounting: 19.6m/s^2
	30Hz Cross direction: 2h・Horizontal direction: 2h・Vertical direction: 4h	
Mass(Tolerance ±10%)	1.0kg	1.2kg
Conformity Standards	・EMC Directive (EN 55011, EN 61000-6-2) ・RoHS Directive (EN IEC 63000)	――――――――――――――――
Remarks	・Conforms to the CE requirements	・There are no contents of controlled substances exceeding the threshold for the RoHS Directive.

Model No. Confugration

RFT − 24 A − R

■Rated
24 : 24V DC
100 : 100V AC
220 : 220V AC

■Sound
A : A type
C : C type
D : D type
E : E type

■Revolving Light Color
R : Red
Y : Yellow
G : Green
B : Blue

Specifications

Sound List

A type	01	Beep (slow intermittent horn)	07	Synthesized Piano	13	Fur Elise	19	Mary had a little Lamb	25	Amaryllis	31	Grandfather's Clock
	02	Stutter (rapid intermittent horn)	08	Synthesized Bell	14	Maiden's Prayer	20	The Camptown Races	26	Symphony No.40	32	Ave Maria
	03	Bell (clear highpitched bell)	09	Stutter + Bell	15	Minuet	21	Cuckoo	27	Silent Lakeside		
	04	Yelp (rapid siren)	10	Synthesized Melody Chime	16	Annie Laurie	22	Blacksmith in the village	28	Mountain musician		
	05	Rapid Hi-Lo	11	Chime	17	London bridge is falling down	23	On the Avignon bridge	29	Romance De Amour		
	06	Melody Chime	12	Call sign	18	Holdiridia	24	Daydream Believer	30	Petrouchka		
C type	01	Beep (slow intermittent horn)	07	Synthesized Piano	13	Can't Take My Eyes off of You	19	Canon	25	I Don't Want to Miss a Thing	31	Imasugu Kisu Mi
	02	Stutter (rapid intermittent horn)	08	Synthesized Bell	14	Top of the World	20	Rara Sanshain	26	Yozorano Mukou	32	Haruyo Koi
	03	Bell (clear highpitched bell)	09	Stutter + Bell	15	The Entertainer	21	Uchuusenkan Yamato	27	Aiwa Katsu		
	04	Yelp (rapid siren)	10	Synthesized Melody Chime	16	Amazing Grace	22	Oshiete	28	Truth		
	05	Rapid Hi-Lo	11	Chime	17	Amairono Kamino Otome	23	Makenaide	29	Gattsudaze		
	06	Melody Chime	12	Call sign	18	Les Champs-Elysees	24	Gonna Fly Now(Theme for "Rocky")	30	Odoru Ponpokorin		
D type	01	Beep (slow intermittent horn)	07	Synthesized Piano	13	Oribiao Kikinagara	19	Happy Birthday	25	Wiegenlied	31	When the Saints Go Marching In
	02	Stutter (rapid intermittent horn)	08	Synthesized Bell	14	A September	20	Hi Ho	26	Rudolph the Red-nosed Reindeer	32	Londonderry Air
	03	Bell (clear highpitched bell)	09	Chime	15	Doyoubino Koibito	21	I've been working on the Railroad	27	She Wore a Yellow Ribbon		
	04	Yelp (rapid siren)	10	Call sign	16	Akino Kehai	22	Bear Song	28	Oh My Darling Clementine		
	05	Rapid Hi-Lo	11	Runner	17	Saafu Tengoku Sukii Tengoku	23	Toys Go Cha Cha Cha	29	Yellow Rose of Texas		
	06	Melody Chime	12	Mamotte Agetai	18	Iro Howaitoburendo	24	Konnako Irukana	30	Yankee Doodle		
E type	01	Beep (slow intermittent horn)	07	Synthesized Piano	13	Train Ride	19	Ringing Phone	25	Annie Laurie	31	Ave Maria
	02	Stutter (rapid intermittent horn)	08	Synthesized Bell	14	Galloping Hi-Lo	20	Two Tone	26	London bridge is falling down	32	Grandfather's Clock
	03	Bell (clear highpitched bell)	09	Stutter + Bell	15	Alien Chatter	21	Alarm Clock	27	Mary had a little Lamb		
	04	Yelp (rapid siren)	10	Synthesized Melody Chime	16	Falling Crystals	22	Ringing Hi-Lo	28	The Camptown Races		
	05	Rapid Hi-Lo	11	Chime	17	Inverted Revellie	23	Fur Elise	29	Amaryllis		
	06	Melody Chime	12	Call sign	18	Galactic Motor	24	Minuet	30	Symphony No.40		

Sound Groups

Sound type・CH \ Sound Groups		Group A (ON 1 2 3 4)	Group B (ON 1 2 3 4)	Group C (ON 1 2 3 4)	Group D (ON 1 2 3 4)	Group E (ON 1 2 3 4)	Group F (ON 1 2 3 4)	Group G (ON 1 2 3 4)	Group H (ON 1 2 3 4)
A type	CH1	Fur Elise	Mary had a little Lamb	Amaryllis	Grandfather's Clock	Romance De Amour	Mary had a little Lamb	Beep(slow intermittent horn)	The Camptown Races
	CH2	Maiden's Prayer	The Camptown Races	Symphony No.40	Ave Maria	The Camptown Races	Symphony No.40	Stutter(rapid intermittent horn)	Cuckoo
	CH3	Minuet	Cuckoo	Silent Lakeside	Daydream Believer	Minuet	Holdiridia	Bell(clear highpitched bell)	Petrouchka
	CH4	Annie Laurie	Blacksmith in the village	Mountain musician	London bridge is falling down	Ave Maria	Daydream Believer	Yelp (rapid siren)	Grandfather's Clock
	CH5	London bridge is falling down	On the Avignon bridge	Romance De Amour	Bell (clear highpitched bell)	Stutter + Bell	Rapid Hi-Lo	Rapid Hi-Lo	London bridge is falling down
	CH6	Holdiridia	Daydream Believer	Petrouchka	Yelp (rapid siren)	Synthesized Melody Chime	Melody Chime	Melody Chime	Holdiridia
	CH7	Chime	Chime	Chime	Synthesized Piano	Synthesized Piano	Synthesized Piano	Synthesized Piano	Silent Lakeside
	CH8	Call sign	Call sign	Call sign	Synthesized Bell	Synthesized Bell	Synthesized Bell	Synthesized Bell	Mountain musician
C type	CH1	Can't Take My Eyes off of You	Canon	I Don't Want to Miss a Thing	Imasugu Kisu Mi	Amairono Kamino Otome	Beep (slow intermittent horn)	Odoru Ponpokorin	Rara Sanshain
	CH2	Top of the World	Rara Sanshain	Yozorano Mukou	Haruyo Koi	Makenaide	Stutter(rapid intermittent horn)	Aiwa Katsu	Uchuusenkan Yamato
	CH3	The Entertainer	Uchuusenkan Yamato	Aiwa Katsu	Uchuusenkan Yamato	Gattsudaze	Stutter + Bell	Truth	Odoru Ponpokorin
	CH4	Amazing Grace	Oshiete	Truth	Rara Sanshain	Top of the World	Synthesized Melody Chime	Les Champs-Elysees	Imasugu Kisu Mi
	CH5	Amairono Kamino Otome	Makenaide	Gattsudaze	Can't Take My Eyes off of You	Canon	Synthesized Piano	Amazing Grace	Amairono Kamino Otome
	CH6	Les Champs-Elysees	Gonna Fly Now (Theme for "Rocky")	Odoru Ponpokorin	Gonna Fly Now (Theme for "Rocky")	Haruyo Koi	Synthesized Bell	Yozorano Mukou	Les Champs-Elysees
	CH7	Chime	Chime	Chime	Chime	Chime	Chime	Chime	Aiwa Katsu
	CH8	Call sign	Call sign	Call sign	Call sign	Call sign	Call sign	Call sign	Truth
D type	CH1	Runner	HAPPY BIRTHDAY	She Wore a Yellow Ribbon	Yellow Rose of Texas	Runner	Saafu Tengoku Sukii Tengoku	Doyoubino Koibito	Hi Ho
	CH2	Mamotte Agetai	Hi Ho	Oh My Darling Clementine	Yankee Doodle	Iro Howaitoburendo	Konnako Irukana	I've been working on the Railroad	I've been working on the Railroad
	CH3	Oribiao Kikinagara	I've been working on the Railroad	Yellow Rose of Texas	When the Saints Go Marching In	Wiegenlied	Oribiao Kikinagara	She Wore a Yellow Ribbon	Yankee Doodle
	CH4	A September	Bear Song	Yankee Doodle	Londonderry Air	Hi Ho	Rudolph the Red-nosed Reindeer	Yankee Doodle	When the Saints Go Marching In
	CH5	Doyoubino Koibito	Toys Go Cha Cha Cha	When the Saints Go Marching In	Beep (slow intermittent horn)	Bell (clear highpitched bell)	Rapid Hi-Lo	Synthesized Piano	Saafu Tengoku Sukii Tengoku
	CH6	Akino Kehai	Konnako Irukana	Londonderry Air	Stutter (rapid intermittent horn)	Yelp (rapid siren)	Melody Chime	Synthesized Bell	Iro Howaitoburendo
	CH7	Saafu Tengoku Sukii Tengoku	Wiegenlied	Runner	Chime	Chime	Chime	Chime	She Wore a Yellow Ribbon
	CH8	Iro Howaitoburendo	Rudolph the Red-nosed Reindeer	Mamotte Agetai	Call sign	Call sign	Call sign	Call sign	Oh My Darling Clementine
E type	CH1	Fur Elise	Minuet	Fur Elise	Alien Chatter	Train Ride	Rapid Hi-Lo	Beep(slow intermittent horn)	Two Tone
	CH2	Minuet	Annie Laurie	London bridge is falling down	Falling Crystals	Galloping Hi-Lo	Chime	Stutter(rapid intermittent horn)	Alarm Clock
	CH3	Annie Laurie	Amaryllis	Mary had a little Lamb	Inverted Revellie	Inverted Revellie	Stutter (rapid intermittent horn)	Bell (clear highpitched bell)	Symphony No.40
	CH4	London bridge is falling down	Symphony No.40	The Camptown Races	Galactic Motor	Galactic Motor	Ringing Phone	Yelp (rapid siren)	Ave Maria
	CH5	Mary had a little Lamb	Grandfather's Clock	Amaryllis	Ringing Phone	Alarm Clock	Stutter + Bell	Rapid Hi-Lo	Inverted Revellie
	CH6	The Camptown Races	Ave Maria	Grandfather's Clock	Two Tone	Ringing Hi-Lo	Synthesized Melody Chime	Melody Chime	Galactic Motor
	CH7	Chime	Chime	Chime	Alarm Clock	Synthesized Piano	Synthesized Piano	Synthesized Piano	Mary had a little Lamb
	CH8	Call sign	Call sign	Call sign	Ringing Hi-Lo	Synthesized Bell	Synthesized Bell	Synthesized Bell	The Camptown Races

Group A : Factory default setting　Group H : Sounds can be chosen from the 32 sound list and combined freely using an SD card (Type：SDV-2GP Sold separately)

指定外公差 General tolerance	角度公差 Angular tolerance ±[°]					寸法公差 Dimensional tolerance ±[mm]						
	短辺長さ Length of Short side	~ 10	~ 50	~ 100	100 ~			~ 6	~ 30	~ 120	~ 300	~ 1000
	精	f	1	0.5	0.3	0.1	精	f	0.05	0.1	0.2	0.4	0.6
							中	m	0.1	0.3	0.5	0.7	1
	粗	v	3	1.5	1	0.5	粗	c	0.3	0.5	1	1.2	2

図番 Drawing No. RFT-24A-W18

ページ Page 4 / 4

改訂 Rev.	年月日 Date	改訂履歴 Revisions
D		

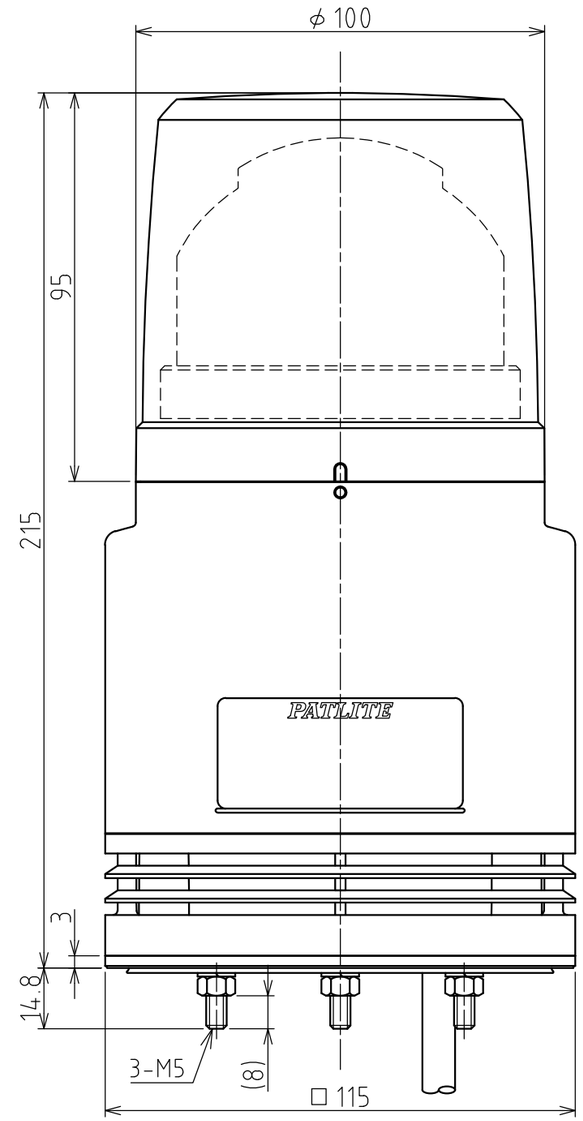

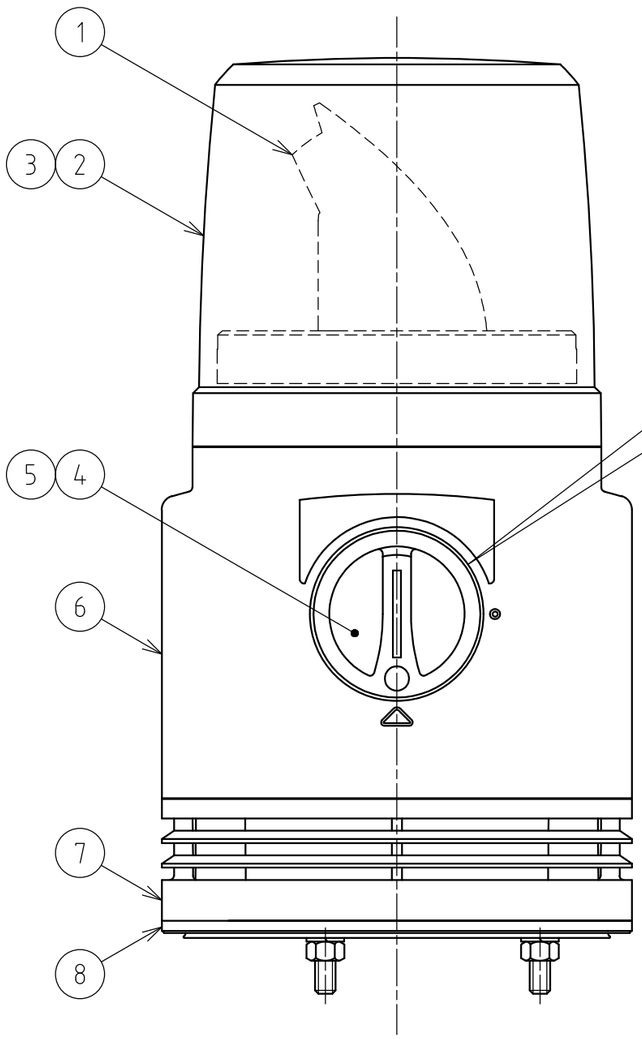

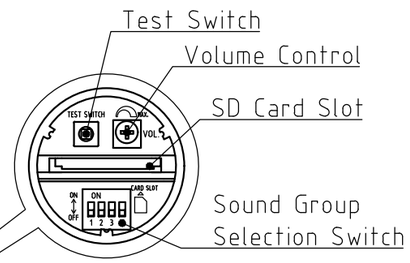

Chart 1

	Diameter	Power Supply Wire	Signal Wire
RFT-24	φ8.0	AWG18	AWG22
RFT-100/220	φ9.0	VSF 0.75mm²	

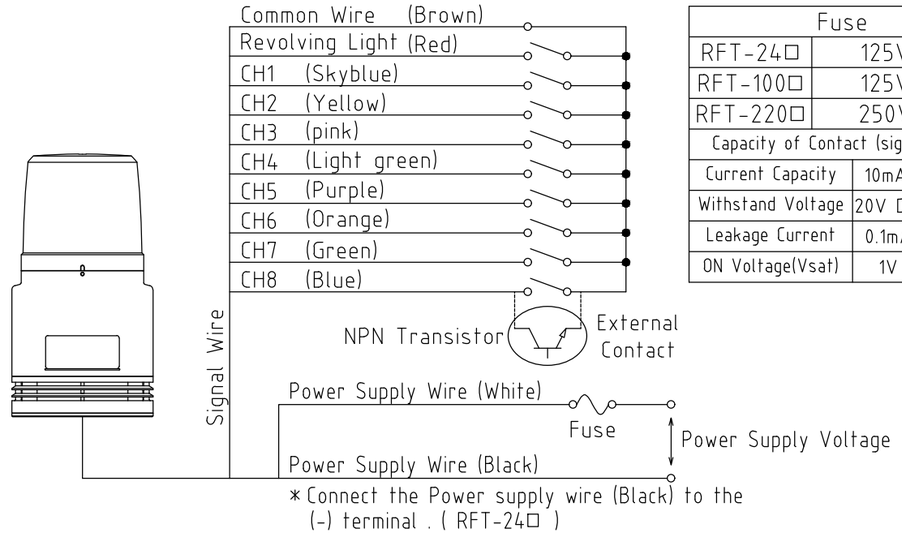

Wiring Example

Fuse	
RFT-24□	125V 1A
RFT-100□	125V 1A
RFT-220□	250V 1A
Capacity of Contact (signal Wire)	
Current Capacity	10mA or more
Withstand Voltage	20V DC or more
Leakage Current	0.1mA or less
ON Voltage(Vsat)	1V or less

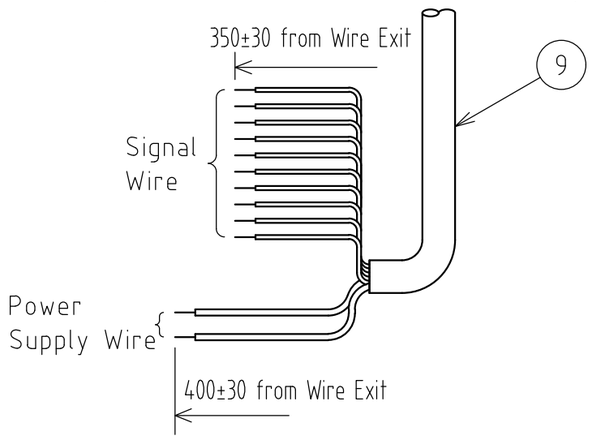

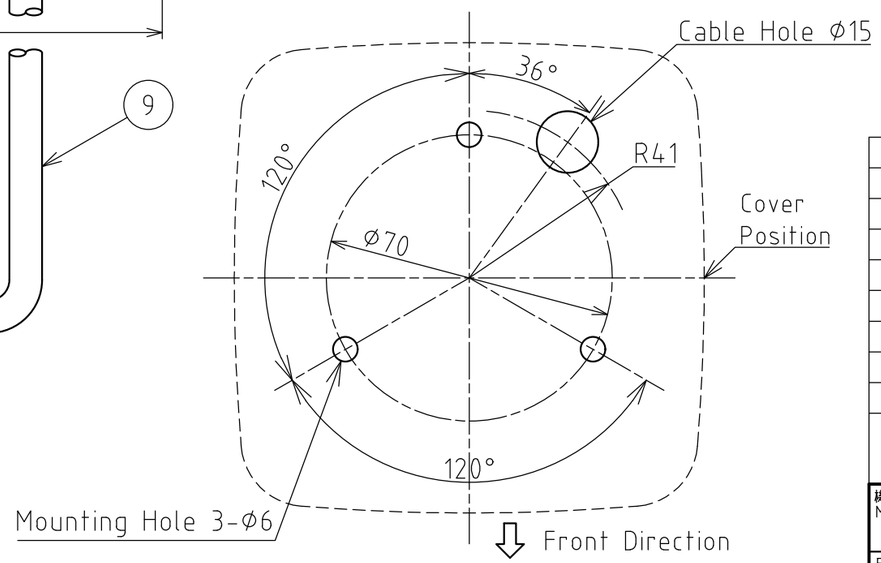

Mounting Dimension

番号 No.	部品名 Part Name	数量 Qty.	記事 Remarks
9	Cabtire cable	1	Refer to chart 1
8	Mount rubber	1	EPDM (Accessory)
7	Base	1	ABS Color:Light gray
6	Case	1	ABS Color:Light gray
5	O-ring	1	VMQ (For Cover)
4	Cover	1	ABS Color:Light gray
3	O-ring	1	NBR (For Dome)
2	Dome	1	PC Color:Red/Yellow/Green/Blue
1	Revolving light unit	1	Color:Red/Yellow/Green/Blue

機種 Model	RFT-24/100/220	特注No. S.P.No.	-
図名 Name	Outer Dimensions Drawing		
品目コード Part No.	-	尺度 Scale	—
三角法 3rd Angle P.	単位 Unit mm	株式会社パトライト PATLITE Corporation	

8 Ver.2.2 A3