生産終了
Production end

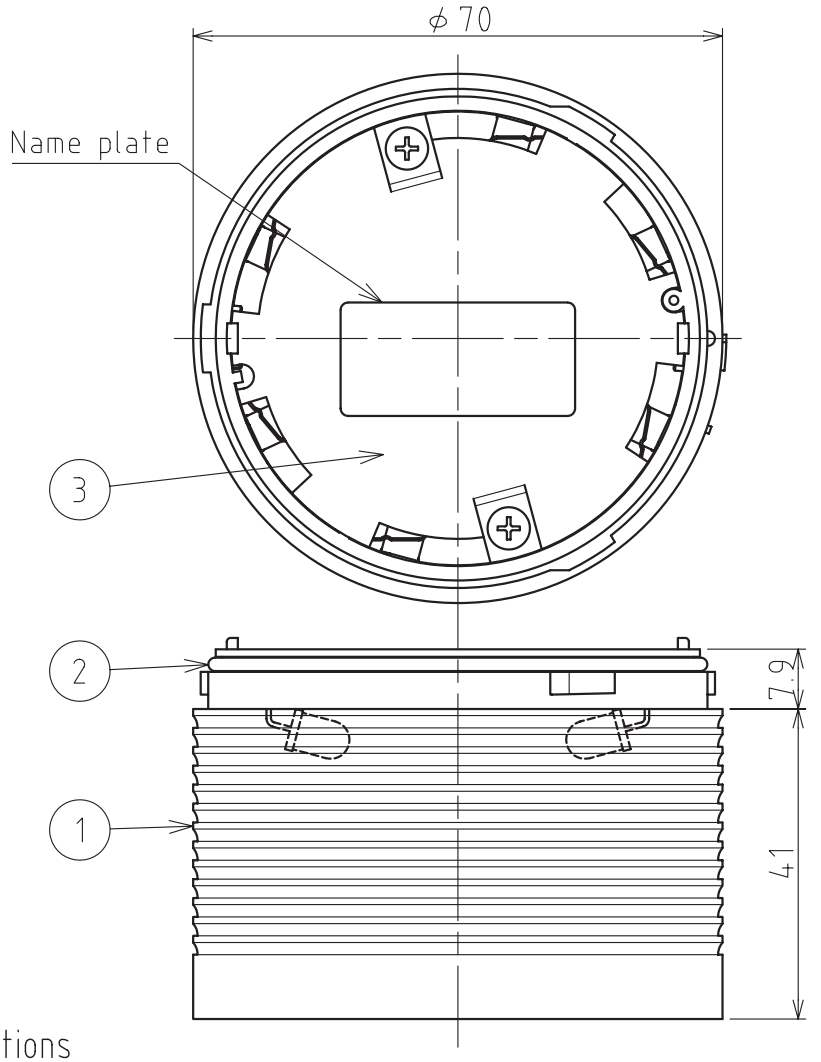

Dimension Drawing

Specifications

Unit name		LED-Unit RED	LED-Unit AMBER	LED-Unit GREEN	LED-Unit BLUE	LED-Unit WHITE
Model No.		LU7-E-R	LU7-E-Y	LU7-E-G	LU7-E-B	LU7-E-C
Rated Voltage		24V DC				
Operating voltage		24V±10% (21.6～26.4V)				
Current consumption / Power consumption	max.	62.5mA／1.50W		35.5mA／0.85W		
	typ.	52.0mA／1.25W		30.0mA／0.72W		
Luminous intensity	min.	1500mcd	1300mcd	1000mcd	630mcd	1900mcd
Temperature range of operation		-30℃ ～ +60℃				
Mass		0.06kg ±10%				

[Remarks] 1.This product complies with the RoHS Directive(DIRECTIVE 2002/95/EC)

番号 No.	部品名 Part Name	品目コード Part No.	数量 Qty.	材料 & 寸法 & 処理 Material & Size & Finish	記事 Remarks
3	Terminal cover	---	1	PET Film	
2	O-ring	---	1	Silicone rubber φ1.78 Gray	
1	Lens	---	1	PC (Color:Red,Amber,Green,Blue,Clear)	

LU7-E Specifications

株式会社 パトライト
PATLITE Corporation

LU7-E-W18C