SPECIFICATIONS

Product Name: Network Monitor Signal Tower with MP3

Model: NH□-□FV2□-□□□□□

生産終了
Production end

PATLITE Corporation

1. General Specifications

Model	5 tiers	NHL-5FV2	NHP-5FV2
	4 tiers	NHL-4FV2	NHP-4FV2
	3 tiers	NHL-3FV2	NHP-3FV2
	2 tiers	NHL-2FV2	NHP-2FV2
	1 tier	NHL-1FV2	NHP-1FV2
Rated Voltage		24VDC (Main Unit)	
	AC Adaptor	Input: 100VAC - 240VAC (50/60Hz) Output: 24VDC	
Operating Voltage Range		Rated Voltage ±10%	
Rated Power Consumption	Main Unit	Standby: 2.2W Maximum: 3.5W (with AC Adaptor, 100VAC input)	
	LED Unit	1.0W (per Unit)	
Operating Ambient Temperature		0℃ - +40℃ (No Dew or Condensation)	
Operating Ambient Humidity		20% - +80% RH (No Dew or Condensation)	
Storage Ambient Temperature		-10℃ - +60℃ (No Dew or Condensation)	
Storage Ambient Humidity		20% - +80% RH (No Dew or Condensation)	
Mounting Location		Indoor Only	
Mounting Direction		Upright	
Protection Rating		IP 20	
Insulation Resistance		More than 10MΩ at 500VDC between live part and non-current carrying metallic part *1	
Withstand Voltage		1500VAC applied for 1min (10mA or less) between live part and non-current carrying metallic part without breaking insulation *1	
Mass (Tolerance ±10%) (AC Adaptor not include)	5 tiers	1270g	1085g
	4 tiers	1210g	1050g
	3 tiers	1150g	1015g
	2 tiers	1090g	980g
	1 tier	1030g	945g
Outer Dimensions		Refer to the Outer Dimension Drawing	
Sound Pressure Level		88dB or more	
	Environmental Condition	Front direction from the center, at 1m, (1kHz sine wave played back at -6dB) MP3 data of the content and use of the environment, the sound pressure level will change.	
Audio Line Output		600Ω 0dBv (Unbalanced, Monaural Mini-Jack)	
Communication Method (LAN)		Ethernet (Conforms to the IEEE 802.3) 10BASE-T / 100BASE-TX (Auto negotiation, Full Duplex / Half Duplex)	
Interface	USB Port	USB2.0 / 1.1 Type-A 1ch (For USB Memory)	
External Contact Output		Non-voltage contact output	
	Number of Contacts	1	
	Contact Capacity	(30VDC @ 3A) inrush current 5A or less (5VDC @ 1mA , Minimum, Reference)	
	Wire Diameter	Solid Wire / Stranded Wire: φ0.41 - 0.81mm (AWG26 - 20)	
	Wiring Method	Screwless terminal block	
External Contact Input		Non-voltage contact input NPN Transistor	
	Number of Contacts	4	
	Contact Capacity	"ON" output current @ 6mA or less per cannel Terminal OFF condition Voltage: 24VDC	
	Wire Diameter	Solid Wire / Stranded Wire: φ0.41 - 0.81mm (AWG26 - 20)	
	Wiring Method	Screwless terminal block	
Operating portion		"Volume", "Reset" Switch, "Clear" Switch, "Mode" Switch, "Test" Switch	
Accessories		AC Adaptor *1, Replacement plug (5 pcs.) *2, Installation Manual, Rubber feet (4pcs.)	
Option		Wall Bracket (NH-WST2), Tint Film (NHL-TF, NHP-TF)	
Remark		*1 : N type excluded *2 : Only W type	

生産終了
Production end

Conformity Standards	RoHS Directive (EN IEC 63000) EMC Directive (EN 55032 (Class A), EN 55024) FCC Part15 Subpart B Class A, ICES-003 Class A UL 1638, UL 464, CSA C22.2 No.205 KC (KN 61000-6-2, KN 61000-6-4) *3 PSE Compliant AC Adaptor
Remark	*3 : Only N type and W type CE Marking UL/cUL Listed W type is an international model.

2. Model

2.1. Model Number Configuration

N H □ - □ F V 2 □ - □ □ □ □ □

Signal Tower Type

L	LR6(φ60)
P	LR4(φ40)

Signal Tower Tiers

1	1 tier
2	2 tiers
3	3 tiers
4	4 tiers
5	5 tiers

AC Adaptor

None	AC Adaptor included
W	AC Adaptor included Replacement plug included
N	AC Adaptor not included

LED Unit Color

R	Red
Y	Amber
G	Green
B	Blue
C	White

From top to bottom

W type is an international model.

2.2. Model Number List

NHL-1FV2-R	NHL-3FV2-RYG	NHP-1FV2-R	NHP-3FV2-RYG
NHL-1FV2-Y	NHL-3FV2N-RYG	NHP-1FV2-Y	NHP-3FV2N-RYG
NHL-1FV2-G	NHL-3FV2W-RYG	NHP-1FV2-G	NHP-3FV2W-RYG
NHL-2FV2-RY	NHL-4FV2-RYGB	NHP-2FV2-RY	NHP-4FV2-RYGB
NHL-2FV2-RG	NHL-5FV2-RYGBC	NHP-2FV2-RG	NHP-5FV2-RYGBC

生産終了
Production end

3. Action Specification

3.1. Information (Main Unit)

Signal Tower			Lighting pattern for each color LED units, such as continuous lighting, flashing pattern 1, and flashing pattern 2
	Flashing pattern 1		ON(500ms), OFF(500ms) (repetition)
	Flashing pattern 2		ON(80ms), OFF(170ms), ON(80ms), OFF(670ms) (repetition)
Sound			Up to 70 types of messages can be played on the main unit speaker and line output.
	Number of messages		Playlist Package : 30 kinds MP3 File : 30 kinds Preset : 10 kinds
		MP3 Format	Bit Rate 32kbit/s, 64kbit/s (Standard Rate), 128kbit/s Constant Bit Rate (CBR) only
		Preset	Buzzer Sound : 4 kinds Chime Sound : 3 kinds Voice Sound : 3kinds
	Playback Pattern		One-shot Playback, Repeat Playback, Endless Playback
		One-shot Playback	It is played back once per playback event.
		Repeat Playback	It is played back when set up to play a certain number of times per playback event. Number of playback times : 1 - 254
		Endless Playback	It will play back repeatedly per playback event.
	Playback Mode		Input Priority Playback, Memory Playback
		Input Priority Playback	If a new playback event occurs, the channel being played back will be interrupted and a new channel will play.
		Memory Playback	When playback is ended, the next available channel stored in memory will play.
Buzzer Sound			Four kinds of buzzer sounds, such as buzzer pattern1, 2, 3, and 4
	Buzzer pattern 1		ON(250ms), OFF(250ms) (repetition)
	Buzzer pattern 2		ON(500ms), OFF(500ms) (repetition)
	Buzzer pattern 3		ON(200ms), OFF(50ms), ON(200ms), OFF(550ms) (repetition)
	Buzzer pattern 4		ON(continuity)

3.2. External control

External Contact Output			External contact output can be controlled when an event occurs or outputting sound.
	Contact Function		Digital Output, BUSY Output
		Digital Output	The digital “A Contact” or “B Contact” output for an automatic OFF function of the digital output port can be set up.
		BUSY Output	It controls the relay contact output in conjunction with the signal output from the line-out.

3.3. Information (Network)

Mail Transmission			When an event occurs, an e-mail message is transmitted to the registered address.
	Number of mail address		8
	Authentication protocol		POP before SMTP, SMTP_AUTH
	Security		SSL, TLS, none
SNMP TRAP Transmission			When an event occurs, TRAP transmission can be executed.
	Number of transmission		8
	Version		v2c
SLMP Write Command			When ”Clear operation" occurs, SLMP Write Command can be executed.
	Number of transmission		4
	Protocol		SLMP (The same format as the QnA compatible 3E and 4E frame of MC protocol) TCP / UDP

生産終了
Production end

4. Function Specification

4.1. Main Unit Control Function

RSH Command	Controllable with RSH Command
HTTP Command	Controllable with HTTP Command
Socket Communication	Controllable with PNS Command and PHN Command
SNMP Command	Controllable with SNMP "set" Command
Version	v1 / v2c
"Clear" Switch	Clear operation is possible with "Clear" Switch of the main unit.

Command		Controllable Action						
		Signal Tower	Sound	Buzzer	Digi-Out	e-mail	TRAP	SLMP
RSH Command		✔	✔	✔	✔	✔ *1	✔ *1	-
HTTP Command		✔	✔	✔	✔	-	-	-
Socket	PNS	✔	✔	✔	✔	-	-	-
	PHN	△ *2	-	△ *3	-	-	-	-
SNMP Command		✔	✔	✔	✔	-	-	-
"Clear" Switch		✔	✔ *4	✔ *5	✔	✔	✔	✔

*1 : It can be used when e-mail or TRAP is set to "Active" in the RSH Command Configuration.
*2 : Signal Tower "Red", "Amber"and "Green",and Flashing pattern 1
*3 : Buzzer pattern1 and Buzzer pattern 2
*4 : In memory playback mode, you can proceed to the next message.
*5 : It is possible to stop only the buzzer while maintaining the state of Signal Tower.

4.2. External Monitoring Function

Ping Monitoring Function			Network abnormality detection by sending Ping network devices
	Number of Monitoring		24
	Monitoring Cycle		1 - 600 seconds
	Sending Count		The number of times to detect can be set from 1 to 30.
	Number of Sending		The number of sending Ping by one monitoring can be set from 1 to 3.
Application Monitoring Function			External devices abnormality detection by receiving the data from them
	Number of Monitoring		4
	Monitoring Cycle		1 - 600 seconds
SNMP TRAP Reception Function			TRAP Reception detection
	Version		v1 / v2c
	Number of Reception		64
	variable-bindings		2 OID per 1 TRAP Reception
		Detectable Type	INTEGER
			OCTET STRING (String data, Binary data)
SNMP Supported Equipment Monitor Function			For SNMP Supported equipment, with the SNMP command, their status can be acquisitioned periodically and monitored.
	Version		v1
	Monitoring Cycle		1 - 60 seconds
	Detection method		Condition Agreement Detection : 20 Change Detection : 5
		Condition Agreement	Detection that the acquired value meets the condition
		Detectable Type	INTEGER
			OCTET STRING (String data, Binary data)
		Change Detection	Detection that the acquired value has changed
		Detectable Type	INTEGER

生産終了
Production end

SLMP Read Command		Detects the state change of the device information of the PLC
	Number of Monitoring	16
	Transmission Interval	10ms / 50ms / 100ms
	Protocol	SLMP (The same format as the QnA compatible 3E and 4E frame of MC protocol) TCP / UDP
External Contact Input Monitor Function		It monitors the state change of external contact input.
	Digital Logic Setting	A Contact, B Contact
	Detection method	Status Change Detection, Status Agreement Detection
	Status Change	Detection of change from OFF to ON or change from ON to OFF
	Status Agreement	Detecting the input for a certain period of time Detection time : 1 - 3600 seconds Number of Detection : 4

	Executable action at detection						
Monitoring	Signal Tower	Sound	Buzzer	Digi-Out	e-mail	TRAP	SLMP
Ping Monitoring	✔	✔	✔	✔	✔	✔	-
Application Monitoring	✔	✔	✔	✔	✔	✔	-
TRAP Reception	✔	✔	✔	✔	✔	✔	-
SNMP Supported	✔	✔	✔	✔	✔	✔	-
SLMP Command	✔	✔	✔	✔	✔	✔	-
External Contact Input	✔	✔	✔	✔	✔	✔	-

4.3. Main Unit Status Acquisition Function

RSH Command	The state of the main body can be acquired by the status acquisition command.
Socket Communication	Status acquisition available with PNS Command and PHN Command
SNMP Command	Status acquisition available with SNMP "get" Command
Version	v1 / v2c
HTTP Communication	By executing CGI, the state of the main body can be acquired in XML data format.
Web browser	Download main unit status and event log with web browser Main Unit Status : XML format file Event Log : text format file
USB Memory	Event log (text file) can be downloaded to USB memory

		Acquisition data				
Command		Signal Tower	Sound	Buzzer	Ex-Input	Ex-Output
RSH Command		✔	✔	✔	✔	✔
Socket	PNS	✔	-	✔	-	-
	PHN	✔ *1	-	✔ *2	-	-
SNMP Command		✔	✔	✔	✔	✔
XML format file		✔	✔	✔	✔	✔

*1 : Signal Tower "Red", "Amber"and "Green",and Flashing pattern 1

*2 : Buzzer pattern 1 and Buzzer pattern 2

生産終了
Production end

4.4. Main Unit Setting Function

Schedule Function		The time period for disabling the notification operation can be set.
	Suspended operations	"Signal Tower", "Sound and Buzzer", "Digital Output" ,"Trap Transmission"
	Time period of the schedule	"24 hours" or "Three time periods per day"
Time Correction Function		The internal clock in this product can communicate with an NTP server to automatically correct the time.
Automatic Network Setting		Network setting in this product can communicate with an DHCP server to automatically set.
Master Volume Setting		Mstar Volume of Buzzer and sound can be set
Standard Action Setting		This product can set lighting color of the Signal Tower after clear operation is executed.
Self-test Function		Self test of Signal Tower and buzzer is possible with test switch of the main body and RSH command.
Config Setting		Various settings of the main body can be read and written as setting file.
Main Unit Setting		Various settings of the main body can be done with a web browser.
USB memory support		By using the USB memory, the following items can be executed by the main body only.
	Config File	Various settings of the main unit can be read and written as a config file.
	Playlist Package	You can set the playlist package created with PATLITE Playlist Editor 2
	Event Log	It is possible to acquire an event log that records the operation history of the main unit.
	Firmware update	It is possible to update firmware.
Setting Supported languages		Japanese, English

4.5. Cloud Function

Supported Cloud Platform			Microsoft Azure *1
			Amazon Web Services (AWS) *2
	Azure	Connection Settings	Azure IoT Central/DPS,Azure IoT Hub
		Built-in features	Device Twin、Direct Method、Device-to-cloud Message、Cloud-to-device Message
	AWS	Connection Settings	AWS IoT Core
		Built-in features	Device Shadow、MQTT client
Main Unit Control			Signal Tower,Sound,Buzzer,Digi-Out
Main Unit Status Acquisition			Signal Tower,Sound,Buzzer,Digi-Out
Main Unit Status Transmission			Signal Tower,Sound,Buzzer,"Clear" switch,External Contact Input,Digi-Out

*1 Microsoft,and Azure are registered trademarks of Microsoft Corporation in the United States and other contries.
*2 Amazon Web Services, the “Powered by AWS” logo, and name any other AWS Marks used in such materials are trademarks of Amazon.com, Inc. or its affiliates in the United States and/or other countries.

生産終了
Production end

指定外公差 General tolerance	角度公差 Angular tolerance ±[°]					寸法公差 Dimensional tolerance ±[mm]						
	短辺長さ Length of short side		～10	～50	～100	100～			～6	～30	～120	～300	～1000
	精	f	1	0.5	0.3	0.1	精	f	0.05	0.1	0.2	0.4	0.6
	粗	v	3	1.5	1	0.5	中	m	0.1	0.3	0.5	0.7	1
							粗	c	0.3	0.5	1	1.2	2

図番 Drawing No.	ページ Page
NHL-5FV2-W18	8 / 10

改訂 Rev.	年月日 Date	改訂履歴 Revisions
G		

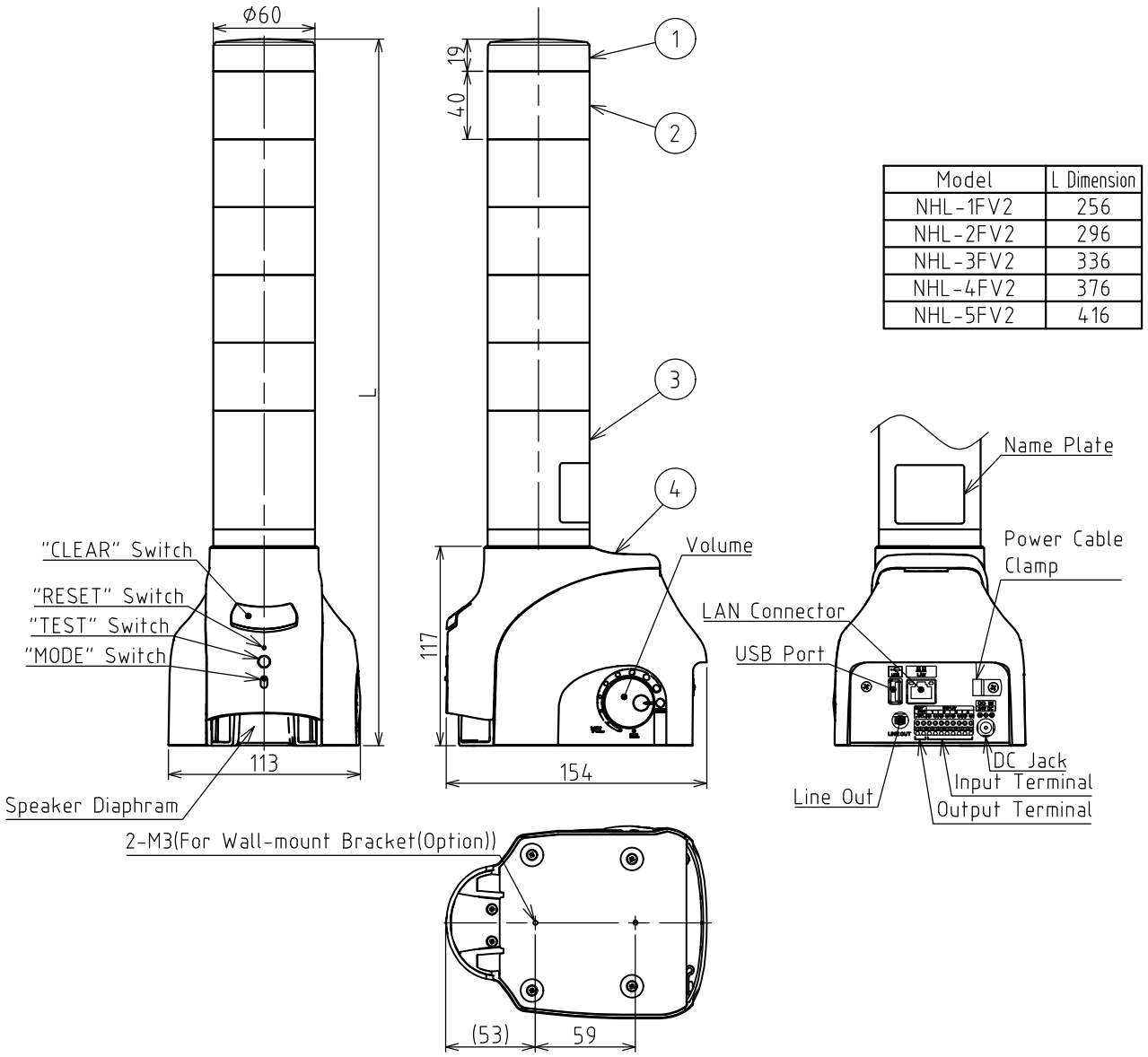

Model	L Dimension
NHL-1FV2	256
NHL-2FV2	296
NHL-3FV2	336
NHL-4FV2	376
NHL-5FV2	416

No.	Names	Material	Color
1	Head Cover	PC	Off-white
2	LED Unit	PC	Clear
3	Tower Body	PC	Off-white
4	Main Body	ABS	Off-white/Medium Gray

生産終了
Production end

番号 No.	部品名 Part Name	数量 Qty.	記事 Remarks

機種 Model	NHL-5FV2	特注No. S.P.No.	-	図名 Name	Outer Dimensions Drawing
品目コード Part No.		尺度 Scale		三角法 3rd Angle P.	単位 Unit mm

株式会社 パトライト
PATLITE Corporation

Ver.2.0

指定外公差 General tolerance	角度公差 Angular tolerance ±[°]					寸法公差 Dimensional tolerance ±[mm]						
	短辺長さ Length of short side		～10	～50	～100	100～			～6	～30	～120	～300	～1000
	精	f	1	0.5	0.3	0.1	精	f	0.05	0.1	0.2	0.4	0.6
	精	f	1	0.5	0.3	0.1	中	m	0.1	0.3	0.5	0.7	1
	粗	v	3	1.5	1	0.5	粗	c	0.3	0.5	1	1.2	2

図番 Drawing No.: NHL-5FV2-W18

ページ Page: 9 / 10

改訂 Rev.	年月日 Date	改訂履歴 Revisions
G		

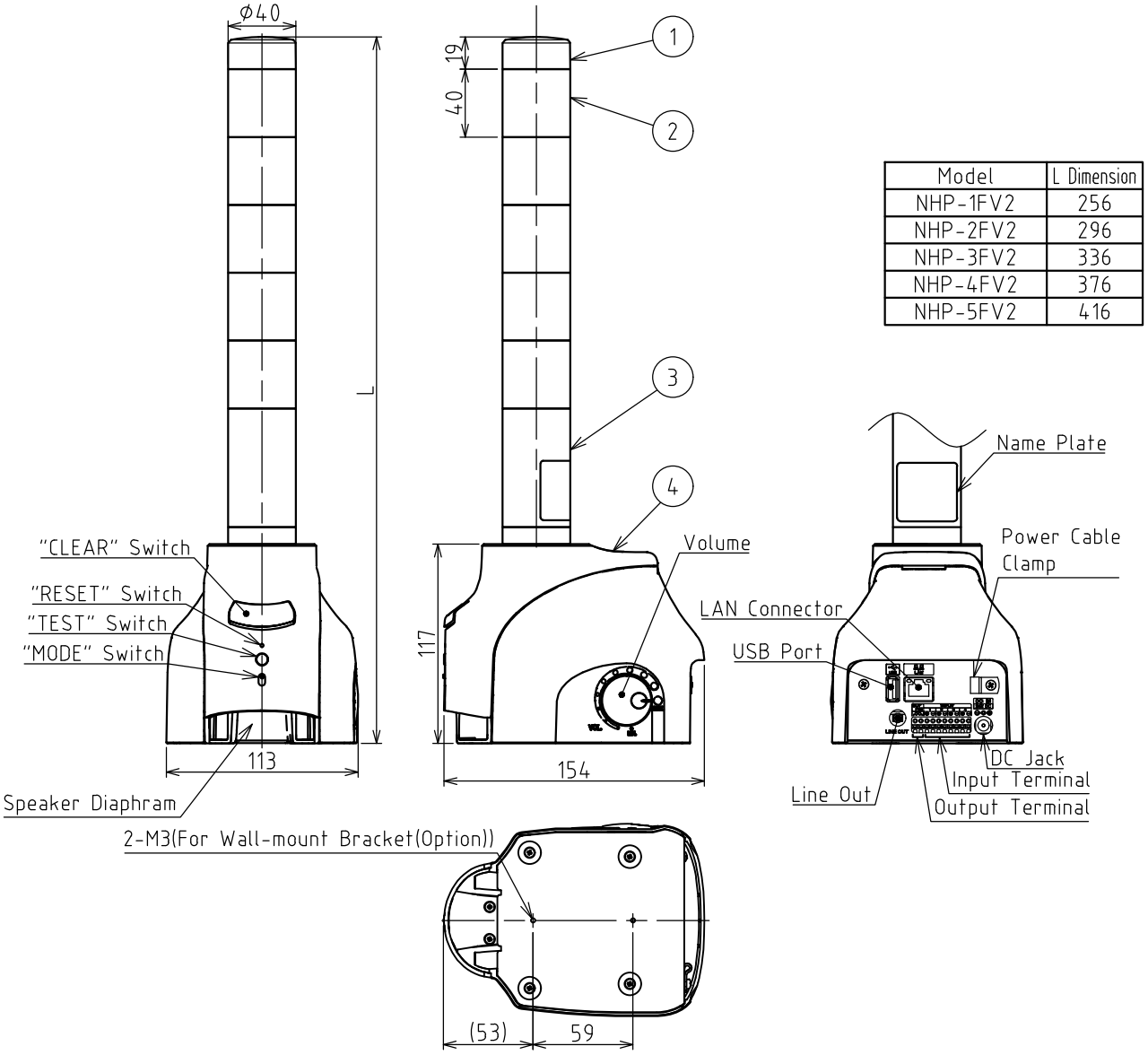

Model	L Dimension
NHP-1FV2	256
NHP-2FV2	296
NHP-3FV2	336
NHP-4FV2	376
NHP-5FV2	416

No.	Names	Material	Color
1	Head Cover	PC	Off-white
2	LED Unit	PC	Clear
3	Tower Body	PC	Off-white
4	Main Body	ABS	Off-white/Medium Gray

生産終了
Production end

番号 No.	部品名 Part Name	数量 Qty.	記事 Remarks

機種 Model	NHP-5FV2	特注No. S.P.No.	-	図名 Name	Outer Dimensions Drawing
品目コード Part No.		尺度 Scale		三角法 3rd Angle P.	単位 Unit mm

株式会社 パトライト PATLITE Corporation

Ver.2.0

指定外公差 General tolerance	角度公差 Angular tolerance ±[°]					寸法公差 Dimensional tolerance ±[mm]						
	短辺長さ Length of short side		～	～	～			～	～	～	～	～
			10	50	100	100 ～			6	30	120	300	1000
	精	f	1	0.5	0.3	0.1	精	f	0.05	0.1	0.2	0.4	0.6
	精	f	1	0.5	0.3	0.1	中	m	0.1	0.3	0.5	0.7	1
	粗	v	3	1.5	1	0.5	粗	c	0.3	0.5	1	1.2	2

図番 Drawing No.	ページ Page
NHL-5FV2-W18	10 / 10

改訂 Rev.	年月日 Date	改訂履歴 Revisions
G		

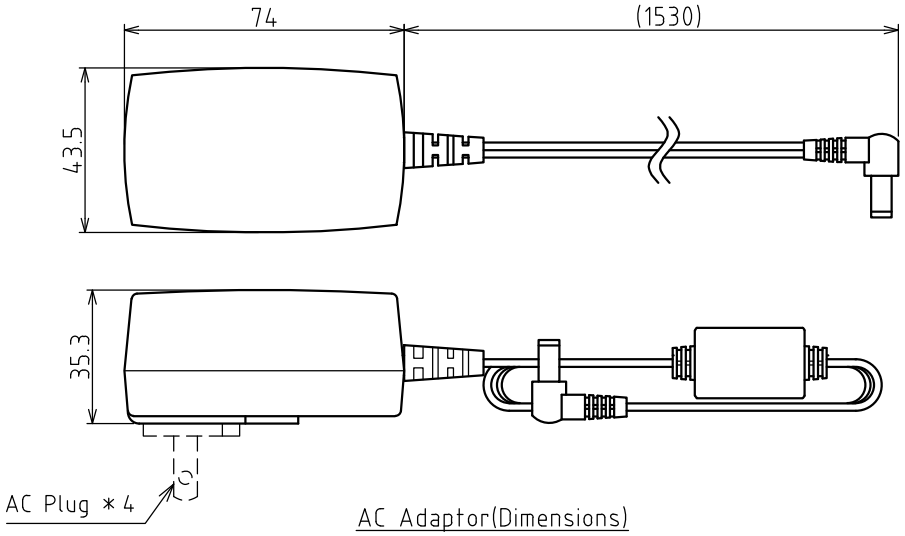

AC Adaptor(Dimensions)

＊4

Model(AC Adaptor)	AC Plug
None	Replacement Plug [UL] is attached
W	Replacement Plug [UL][VDE][UK][CCC][KC] included
N	AC Adaptor not included

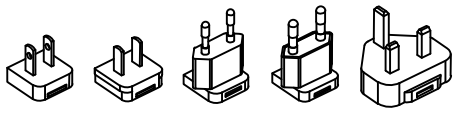

UL CCC VDE KC UK

Replacement Plug

生産終了
Production end

番号 No.	部品名 Part Name	数量 Qty.	記事 Remarks

機種 Model	特注No. S.P.No.	図名 Name	Outer Dimensions Drawing
	-		

品目コード Part No.	尺度 Scale	三角法 3rd Angle P.	単位 Unit	株式会社 パトライト PATLITE Corporation
			mm	

Ver.2.0