生産終了
Production end

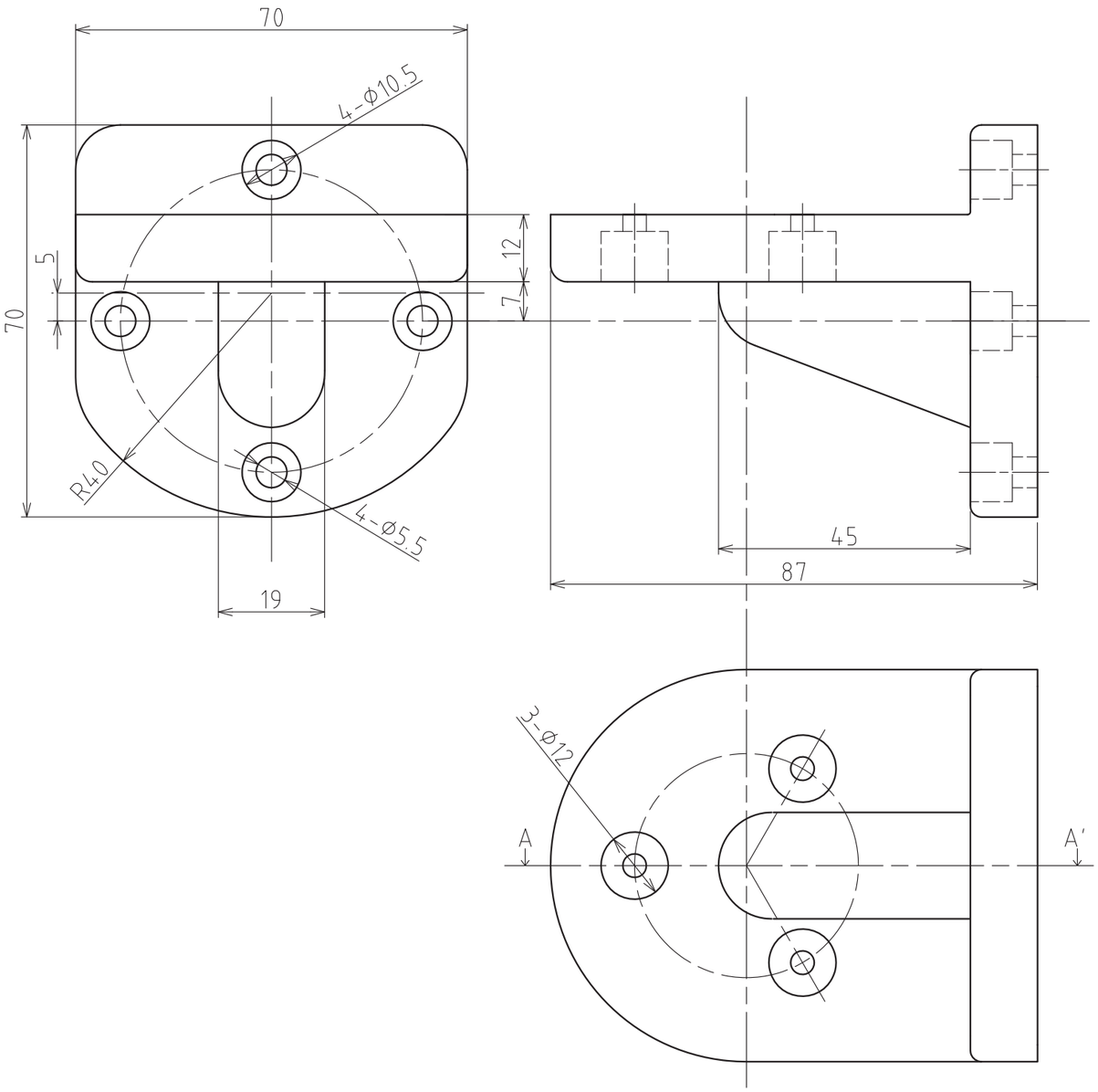

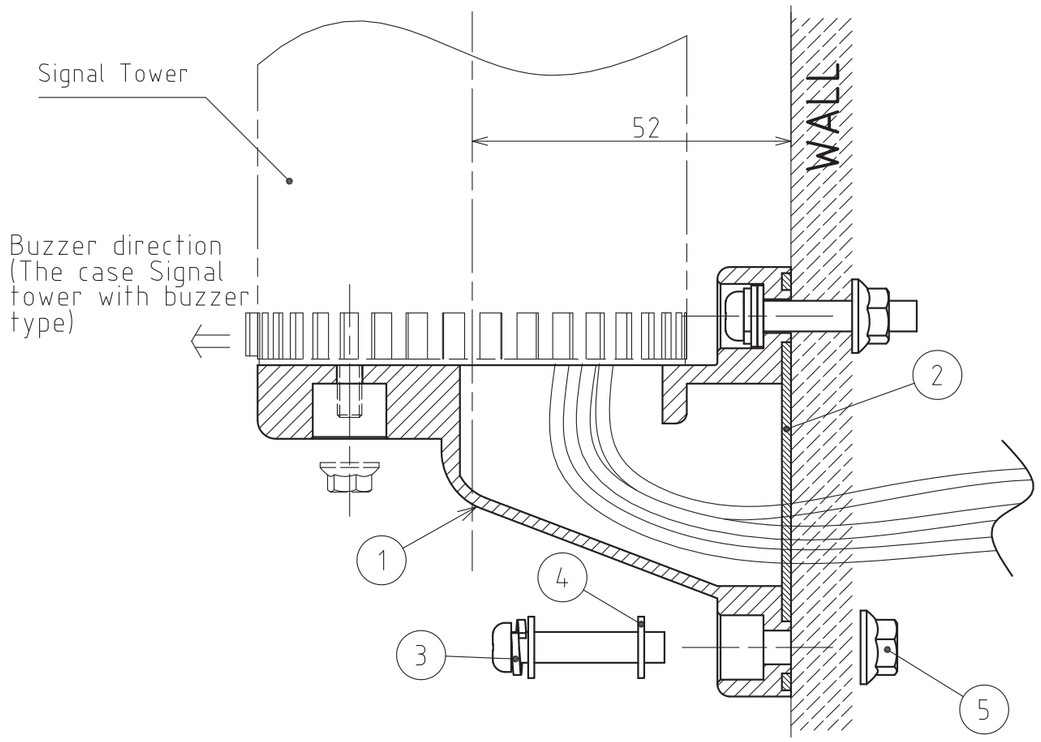

※ Tighten torque of
M5 screws and nuts:1.42N・m

(A-A'cross section)

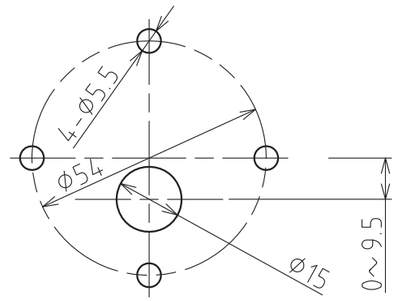

Mounting dimensions

番号 No.	部品名 Part Name	品目コード Part No.	数量 Qty.	材料 & 寸法 & 処理 Material & Size & Finish	記事 Remarks
5	Hexagon nut with flange		4	M5,MFZn-C	
4	Rubber flat washer		4	M5 type,CR	
3	+ pan head screw with captive washer		4	M5× 25,PW=10× 0.8,MFZn-C	
2	Water proof sheet		1	CR	Black
1	Bracket		1	PBT/ABS NOVALLOY	Light gray

NOTE
1. SZ-018 fit for Model LU-7 and LHE-A.
2. Mount SZ-018 on flat board with strength enough.
   (board thickness:max.10mm、Mount direction:Upright only)
3. After mounting SZ-018 on the wall, set Signal tower.
4. Protection rating：IP65(with LU7 and LHE-A type / IP54(with LHE-AFB type)
5. Mass：Main unit(Bracket+Water proof sheet) 74g , Accessories 28g
6. This product complies with the RoHS Direction (DIRECTIVE/2002/95/EC).

製品仕様書
Specifications

株式会社 パトライト
PATLITE Corporation

SZ-018-W18B