生産終了
Production end

SPECIFICATIONS

[General Specifications]

Model		XPE-12	XPE-24	XPE-M2
Rated Voltage		12V DC	24V DC	100V/200V/230V AC (50/60Hz)
Operating Voltage Range		9.5V DC ～ 15V DC	20V DC ～ 30V DC	90V AC ～ 250V AC
Rated Current Consumption	Typ.	0.42A	0.19A	0.11A (at 100VAC) 0.07A (at 200VAC) 0.07A (at 230VAC)
	Max.	0.50A	0.23A	0.12A (at 100VAC) 0.08A (at 200VAC) 0.08A (at 230VAC)
Operating Ambient Temperature		-30℃ ～ +75℃		-20℃ ～ +60℃
Operating Ambient Humidity		Less than 90% (No condensation)		
Storage Ambient Temperature		-35℃ ～ +80℃		-25℃ ～ +65℃
Storage Ambient Humidity		Less than 90% (No condensation)		
Mounting Location		Indoors and Outdoors		
Mounting Direction		Upright ,Inverted and Sideways (In a wet environment, Upright only)		
Protection Rating		IP23 (IEC 60529)		
Vibration Resistance		$45m/s^2$		$20m/s^2$
Insulation Resistance		More than 1MΩ at 500VDC between the terminals and the chassis		
Withstand Voltage		The following voltage applied for 1min between terminals and chassis without breaking insulation		
		500V AC		1500V AC
Flashing Rate		110±10 Flashes Per Minute (Triple Flash Pattern)		
Luminous Intensity		Red:64cd, Amber:116cd, Green:88cd, Blue:34cd		
Mass (Tolerance ±10%)		1.2kg		
Outer Dimensions		Refer to the Outer Dimension Drawing		
Conformity Standards		RoHS Directive (EN 50581) EMC Directive (EN 55015, EN 61547) FCC Part15 SubpartB Class A		EMC Directive (EN55015, EN61547, EN61000-3-2, EN61000-3-3) Low Voltage Directive (EN 62471, EN 60598-1, EN 60598-2-1)
Remarks		Conforms to the CE requirements		

No.XPE-24-W18B-1_2

PATLITE Corporation

生産終了
Production end

Model Number Configuration

XPE-□□-□

- The Iluminescence color is indicated.
  R:Red / Y:Amber / G:Green / B:Blue
- Rated Voltage
  12:12VDC / 24:24VDC / M2:100/200/230VAC

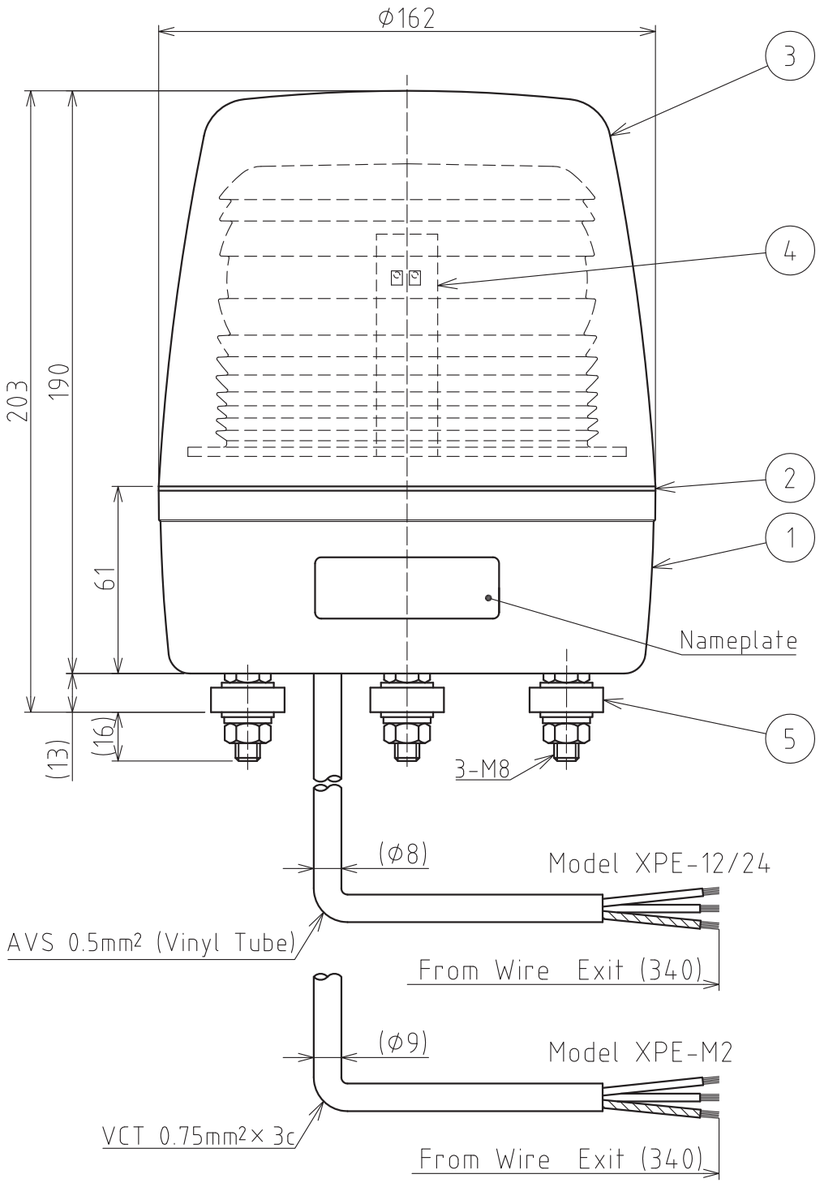

Dimensions

Wiring Example

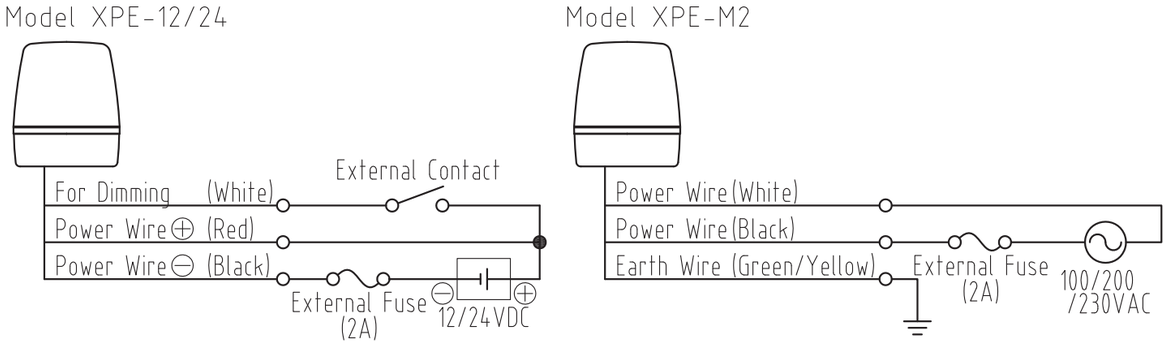

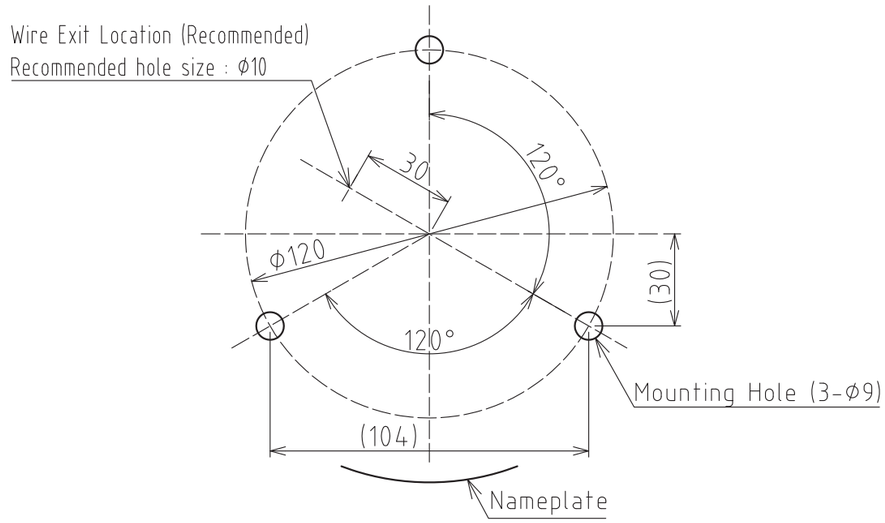

Installation Dimensions

番号 No.	部品名 Part Name	品目コード Part No.	数量 Qty.	材料 & 寸法 & 処理 Material & Size & Finish	記事 Remarks
5	Rubber	–	3	EPDM (Black)	
4	LED Unit	–	1		
3	Globe	–	1	AS	
2	Rubber Packing	–	1	EPDM (Black)	
1	Body	–	1	AES (Light Gray)	

外観図面
Outer Dimension Drawing

株式会社 パトライト
PATLITE Corporation

XPE-24-W18B-2_2