生産終了
Production end

Specifications

MODEL	EWHS-24□-□	EWHS-100□-□	EWHS-200□-□
Rated Voltage	12-24V AC/DC	100V AC (50/60Hz)	200V AC (50/60Hz)
Voltage Range	8V～28V AC / 9V～35V DC	90V～132V AC	180～260V AC
Continuous rated power consumption	8W	10W	10W
	Condition for ditermination : Play sound "Rapid Hi-Lo" / Rated voltage / Volume maximum All signal line and common line are short-circuited		
Maximum instantaneous power consumption	10W	14W	14W
	Condition for ditermination : Play sound "Synthesized Bell" / Rated voltage / Volume maximum All signal line and common line are short-circuited		
Maximum Sound Pressure Level	105dB or more ※The sound pressure lebel may be lower depending on the Sound, usage environment, and supplied voltage.		
Volume	Adjustable : Min～Max		
Number of channels	32		
Starting time	300msec or less (both Operation by CH signal and Operation by turning on the power)		
Operating Temperture Range	-20～50℃		
Relative Humidity	85%RH or lower (No Condensation)		
Mounting of Product	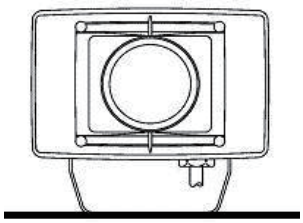	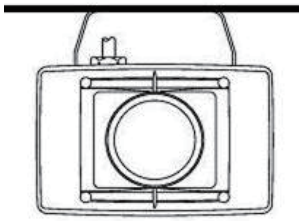	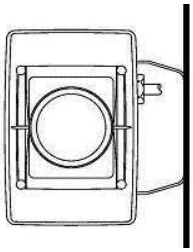
	Normal direction Indoor:OK / Outdoor:OK(*1)	Reverse direction Indoor:OK / Outdoor:OK(*1)	Lateral direction Indoor:OK / Outdoor:OK(*1)
	(*1) Mount the horn facing more downward than the horizontal.		
Protection Rating	IP53		
Insulation Resistance	1MΩ and above (At 500V DC) (between current-carrying metal parts and non-current-carrying metal part .)		
Dielectric Strength	500V AC for 1 min	1000V AC for 1 min	1500V AC for 1 min
	(between current-carrying metal parts and non-current-carrying metal part)		
Resistance to Vibration	Normal direcrion:45m/s^2 30Hz, Back and forth 2h･Right and Left 2h･Up and down 4h		
Mass	1.3kg±10%	1.5kg±10%	
Model No. Confugration	EWHS - 24 A - J ■Rated Voltage 24 :12-24V AC/DC 100 :100V AC 200 :200V AC ■Sonud Type A : Atype C : Ctype D : Dtype E : Etype ■Body Color J : Light Gray R : Red Y : Yellow		
Remarks	･EWHS-24□ complies with the EC DIRECTIVE and indicates CE marking. ～Regarding the Copylight～ ･PATLITE Corpration has applied for permission to use certain copylighted music or songs recording in Sound type A/C/D. Incase using Sound type A/C/D outside of Japan, Need to applied for permission to use based on the law in each country. But Sound type E can use outside of Japan without appling for permission to use ,because not include music or songs which need to applied for permission to use outside of Japan.		

生産終了
Production end

Specifications

Sound List

T-06B0152
T-0710139
T-0710140

Sound No.	Sound No. Selection Switch Setting	Atype	Ctype	Dtype	Etype
01		Beep (slow intermittent horn)			
02		Stutter (rapid intermittent horn)			
03		Bell (clear highpitched bell)			
04		Yelp (rapid siren)			
05		Rapid Hi-Lo			
06		Melody Chime			
07		Synthesized Piano			
08		Synthesized Bell			
09		Stutter + Bell		Chime	Stutter + Bell
10		Synthesized Melody Chime		Call sign	Synthesized Melody Chime
11		Chime		Runner	Chime
12		Call sign		Mamotte Agetai	Call sign
13		Fur Elise	Can't Take My Eyes off of You	Oribiao Kikinagara	Train Ride
14		Maiden's Prayer	Top of the World	A September	Galloping Hi-Lo
15		Minuet	The Entertainer	Doyoubino Koibito	Alien Chatter
16		Annie Laurie	Amazing Grace	Akino Kehai	Falling Crystals
17		London bridge is falling down	Amairono Kamino Otome	Saafu Tengoku Sukii Tengoku	Inverted Revellie
18		Holdiridia	Les Champs-Elysees	Iro Howaitoburendo	Galactic Motor
19		Mary had a little Lamb	Canon	Happy Birthday	Ringing Phone
20		The camptown Races	Rara Sanshain	Hi Ho	Two Tone
21		Cuckoo	Uchuusenkan Yamato	I've been working on the Railroad	Alarm Clock
22		Blacksmith in the village	Oshiete	Bear Song	Ringing Hi-Lo
23		On the Avignon bridge	Makenaide	Toys Go Cha Cha Cha	Fur Elise
24		Daydream Believer	Gonna Fly Now (Theme for "Rocky")	Konnako Irukana	Minuet
25		Amaryllis	I Don't Want to Miss a Thing	Wiegenlied	Annie Laurie
26		Symphony No.40	Yozorano Mukou	Rudolph the Red-nosed Reindeer	London bridge is falling down
27		Silent Lakeside	Aiwa Katsu	She Wore a Yellow Ribbon	Mary had a little Lamb
28		Mountain musician	Truth	Oh My Darling Clementine	The camptown Races
29		Romance De Amour	Gattsudaze	Yellow Rose of Texas	Amaryllis
30		Petrouchka	Odoru Ponpokorin	Yankee Doodle	Symphony No.40
31		Grandfather's Clock	Imasugu Kisu Mi	When the Saints Go Marching In	Ave Maria
32		Ave Maria	Haruyo Koi	Londonderry Air	Grandfather's Clock
	※Factory default setting:Sound No.01"Beep (slow intermittent horn)"				

EWHS-24-W18E-2_3

生産終了
Production end

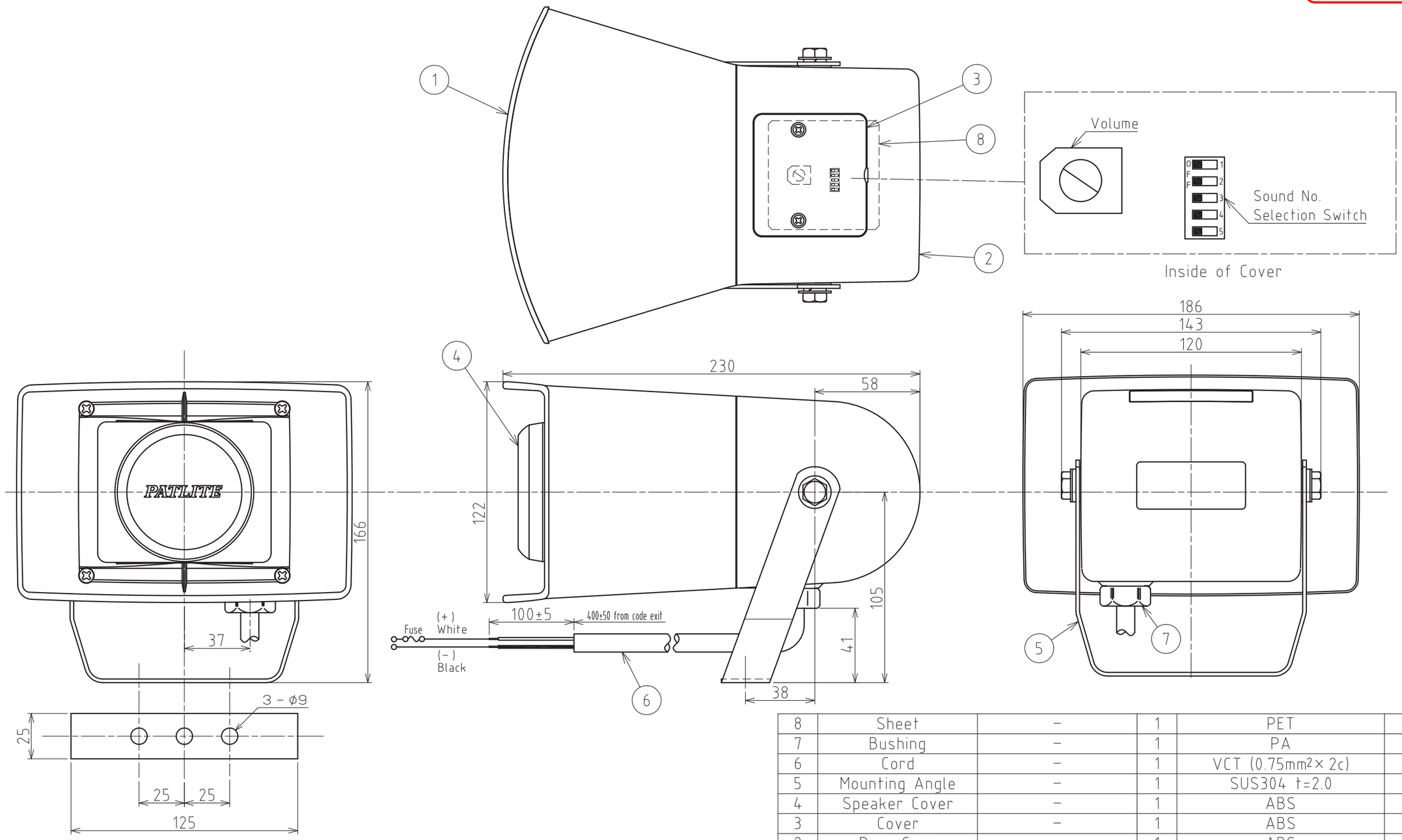

番号 No.	部品名 Part Name	品目コード Part No.	数量 Qty.	材料 & 寸法 & 処理 Material & Size & Finish	記事 Remarks
8	Sheet	-	1	PET	
7	Bushing	-	1	PA	
6	Cord	-	1	VCT (0.75mm²× 2c)	
5	Mounting Angle	-	1	SUS304 t=2.0	
4	Speaker Cover	-	1	ABS	
3	Cover	-	1	ABS	
2	Rear Case	-	1	ABS	
1	Front Case	-	1	ABS	

外観図面
Outer Dimension Drawing

株式会社 パトライト
PATLITE Corporation

EWHS-24-W18E-3_3