Multi-color LED Signal Tower

LA6

Φ60 mm | CE | RoHS 10 | UL* | FCC* | KC* | PSE (5A) | IP65 | IP54 with Alarm | Indoor Use | Upright Mounting | Ambient Temperature -25℃~+60℃ | Luminous Color Multi-color (21 colors) | Continuous On | Flashing | Pulse | 85dB | 11 Sounds

* 24V model only

■ 24V DC

■ 100-240V AC

Off white / Silver — Continuous ON Type *1
Off white / Silver — Flashing / Alarm Type
Off white / Silver — Continuous ON Type *1
Off white / Silver — Flashing / Alarm Type
Steel Pole Type (LJ)
Off white — Flashing / Alarm Type

*1 Flashing available in Smart Mode

Model Number Configuration

LA6-5DLJWB-RYGBC

① ② ③ ④ ⑤ ⑥

* Colors for each tier can be changed after purchase.
* LJ type not available in U (silver) body.
* 100-240V AC type available for LA6-5AWJWB-RYGBC only.

① Number of Tiers	② Rated Voltage	③ Mounting / Wiring	④ Body Color	⑤ Flashing / Buzzer	⑥ Luminous Color*
3 = 3 tiers	A = 100~240V AC	TN = Direct mount / Terminal block	W = Off-white	B = Flashing / Buzzer	RYG = 3 tiers
5 = 5 tiers	D = 24V DC	LJ = Steel pole + mounting angle / Cable	U = Silver	N = No flashing / No buzzer	RYGBC = 5 tiers
		WJ = Direct mount / Cable			

* Initial factory setting. Other colors can be set after purchase.

Dimensions (mm)

■ TN Direct mount, Terminal block

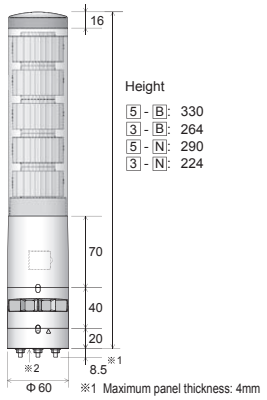

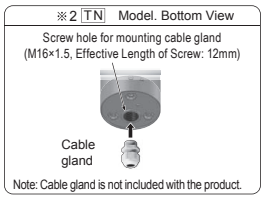

■ LJ Steel pole, Mounting angle, Cable

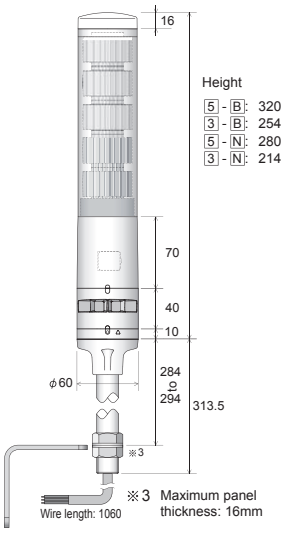

■ WJ Direct mount, Cable
A AC 100 - 240V AC model

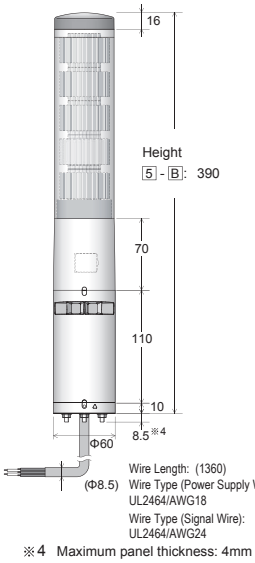

■ WJ Direct mount, Cable
D 24V DC Type

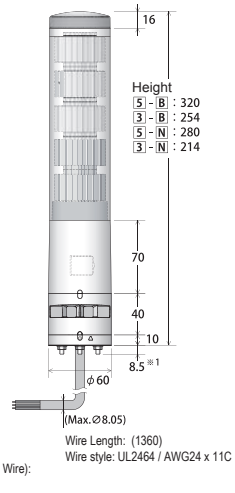

Installation Dimensional Drawing (mm)

TN Direct mount, Terminal block model

WJ Direct mount, Cable model

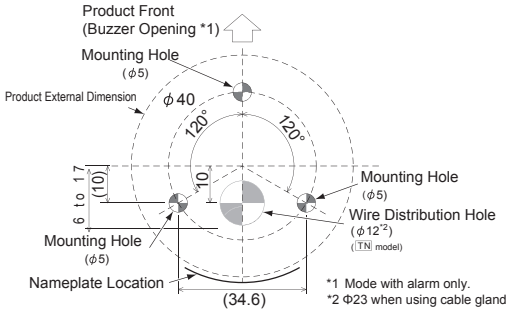

LJ L-Bracket dimensions (included with LJ pole mount model)

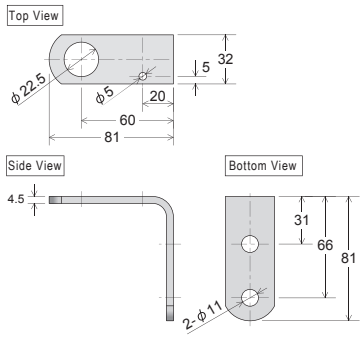

Product List

Model Number	Number of Tiers	Rated Voltage	Mounting Type	Wiring	Function	Alarm	Body Color	Luminous Color	Power Consumption	Mass
LA6-3DWJWB-RYG	3	24V DC	Direct	Cable	Continuous On and flashing	Yes	Off white	Multi-color (21 colors)	4.5W	0.45kg
LA6-3DWJWN-RYG	3	24V DC	Direct	Cable	Continuous On	None	Off white	Multi-color (21 colors)	4.5W	0.40kg
LA6-3DWJUB-RYG	3	24V DC	Direct	Cable	Continuous On and flashing	Yes	Silver	Multi-color (21 colors)	4.5W	0.45kg
LA6-3DWJUN-RYG	3	24V DC	Direct	Cable	Continuous On	None	Silver	Multi-color (21 colors)	4.5W	0.45kg
LA6-3DTNWB-RYG	3	24V DC	Direct	Terminal block	Continuous On and flashing	Yes	Off white	Multi-color (21 colors)	5.5W	0.48kg
LA6-3DTNWN-RYG	3	24V DC	Direct	Terminal block	Continuous On	None	Off white	Multi-color (21 colors)	4.5W	0.42kg
LA6-3DTNUB-RYG	3	24V DC	Direct	Terminal block	Continuous On and flashing	Yes	Silver	Multi-color (21 colors)	5.5W	0.48kg
LA6-3DTNUN-RYG	3	24V DC	Direct	Terminal block	Continuous On	None	Silver	Multi-color (21 colors)	4.5W	0.42kg
LA6-3DLJWB-RYG	3	24V DC	Pole with L-bracket	Cable	Continuous On and flashing	Yes	Off white	Multi-color (21 colors)	5.5W	0.98kg
LA6-3DLJWN-RYG	3	24V DC	Pole with L-bracket	Cable	Continuous On	None	Off white	Multi-color (21 colors)	4.5W	0.93kg
LA6-5DTNWB-RYGBC	5	24V DC	Direct	Terminal block	Continuous On and flashing	Yes	Off white	Multi-color (21 colors)	8W	0.59kg
LA6-5DTNWN-RYGBC	5	24V DC	Direct	Terminal block	Continuous On	None	Off white	Multi-color (21 colors)	7W	0.53kg
LA6-5DTNUB-RYGBC	5	24V DC	Direct	Terminal block	Continuous On and flashing	Yes	Silver	Multi-color (21 colors)	8W	0.59kg
LA6-5DTNUN-RYGBC	5	24V DC	Direct	Terminal block	Continuous On	None	Silver	Multi-color (21 colors)	7W	0.53kg
LA6-5DWJWB-RYGBC	5	24V DC	Direct	Cable	Continuous On and flashing	Yes	Off white	Multi-color (21 colors)	8W	0.56kg
LA6-5DWJWN-RYGBC	5	24V DC	Direct	Cable	Continuous On	None	Off white	Multi-color (21 colors)	8W	0.51kg
LA6-5DWJUB-RYGBC	5	24V DC	Direct	Cable	Continuous On and flashing	Yes	Silver	Multi-color (21 colors)	8W	0.56kg
LA6-5DWJUN-RYGBC	5	24V DC	Direct	Cable	Continuous On	None	Silver	Multi-color (21 colors)	8W	0.51kg
LA6-5DLJWB-RYGBC	5	24V DC	Pole with L-bracket	Cable	Continuous On and flashing	Yes	Off white	Multi-color (21 colors)	8W	1.09kg
LA6-5DLJWN-RYGBC	5	24V DC	Pole with L-bracket	Cable	Continuous On	None	Off white	Multi-color (21 colors)	7W	1.04kg
LA6-5AWJWB-RYGBC	5	100 - 240V AC	Direct	Cable	Continuous On and flashing	Yes	Off white	Multi-color (21 colors)	8W	0.74kg

Specification

Supported Transistors	D type (24V DC): NPN / PNP A type (100-240V AC): NPN
Alarm Sound	No.1: 2400Hz peak (continuous sound) No.2: 2400Hz Pippi (0.05sec on / 0.05sec silent) No.3: 2400Hz beeping (1.5sec on / 1.5sec silent) No.4: 2400Hz beep (0.5sec on / 0.5sec silence) No.5: 3600Hz peak (continuous sound) No.6: 3600Hz Pippi (0.05sec on / 0.05sec silent) No.7: 3600Hz beeping (1.5sec on / 1.5sec silent) No.8: 3600Hz beep (0.5sec on / 0.5sec silence) No.9: 2400Hz & 3375Hz Pipipippo (0.25sec/0.25sec) No.10: 2400Hz & 3600Hz (Pipopipo) (0.25sec/0.25sec) No.11: 4000Hz & 4800Hz Peepo (0.5sec/0.5sec)
Volume Control	Four settings with a push of a button (factory default set to max.)

Optional Parts

For details refer to P. 93 to P. 98

Product Description	Model Number
Pole mounting assembly	SZ-70L
Pole mounting bracket	SZ-010
Pole mounting bracket	SZ-016A
Wall mount bracket	SZK-003W / U
Pole upper bracket (with waterproof ring and screws)	SZP-004W
Stationary bracket	SZW-060W
Mounting pole (100mm)	POLE-100A21
Mounting pole (300mm)	POLE-300A21
Mounting pole (800mm)	POLE-800A21